# ENTRON™

# FLAT PLATE CONTROLS

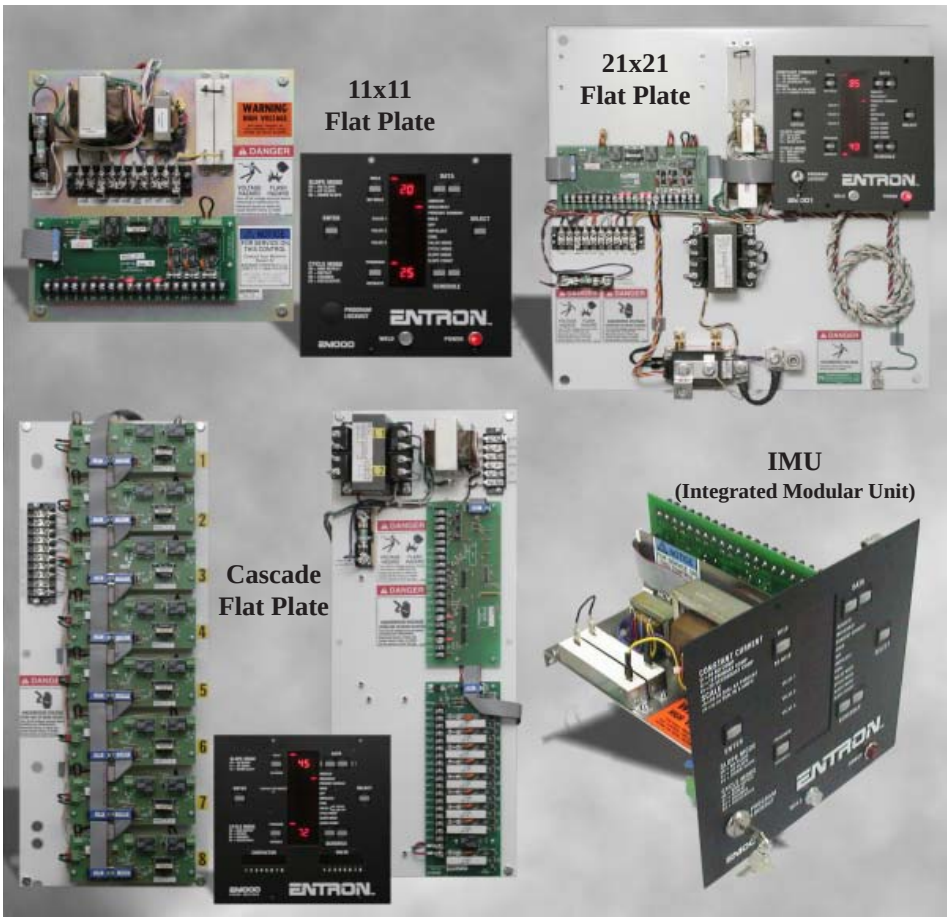


- ***Use in Retrofit, New, or Custom Designs***
- ***Keeps Shipping Costs Economical*** – Use in situations where shipping weight is a factor.
- ***Customize Designs to Match Existing Systems***
- ***Low Cost***
- ***Easily Serviced***
- ***Multiple Options Available***
- ***No Need to Replace Primary Wiring, Disconnect, and SCRs***
- ***Replaces "Works in a Drawer" Chassis in Older European Machines***
- ***Include Weld Control as Part of Machine Cabinet***

## Features

- Standard ENTRON product in component form
- Various ENTRON models available
- Four basic design choices
- Use to retrofit older ENTRON controls to current technology
- Use to retrofit competitor's controls to current ENTRON technology; complete with special hardware and precautionary labeling

## Capabilities

- Multiple configurations allow integration into various machine types and styles
- Single contactor controls
- Multiple contactor controls
- Cascade Flat Plate designed to ease retrofit of older ENTRON controls
- Fires certain special SCR assemblies with integrated pulse transformer

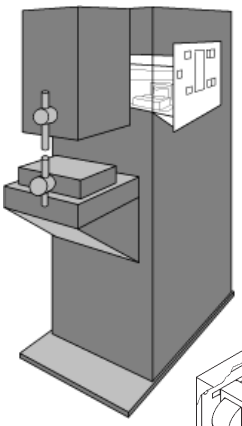

IMU

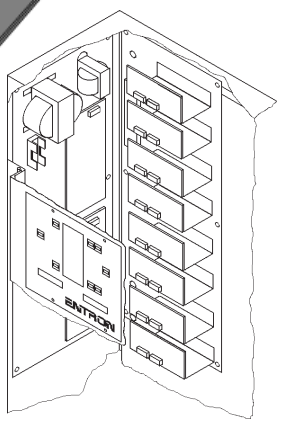

Cascade
Retrofit
Flat Plate

***SCR Contactors available at discount when ordered with Flat Plate Control***

***Exclusive ENTRON two year warranty***

## Available Models

- EN1000
- EN1001
- EN1500
- EN1000 Cascade
- EN1001 Cascade
- EN2000

## Options

- Primary Coil – P2, P5, P10

- Secondary Coil – S6, S10

- RS232/485
- Pressure Control System (IPSC)
- Schedule Select (S49 or S99)
- Remote Data Entry (RDEjr.)
- Remote Terminal (RT4jr.)
- Memory Modules (MM2 or MM8)
- DC Valves
- Valve Select 1 of 7
- Terminal Strip Skip (TSS)
- Spanish Dial Plate Overlays

**Available SCR Contactor Assemblies For External Mounting**

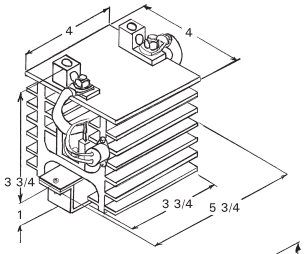


EN(X)-150 or EN(X)-300

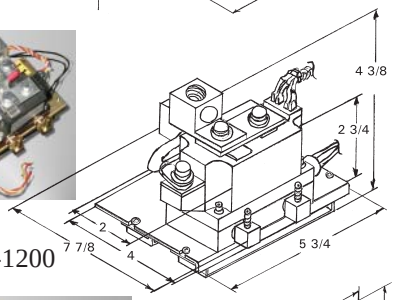


EN(X)-1200

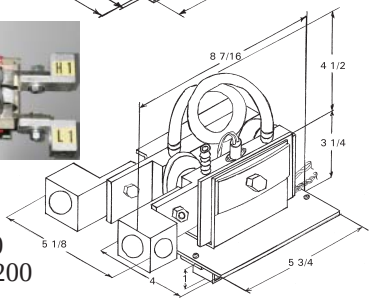


EN(X)-1800 or EN(X)-2200

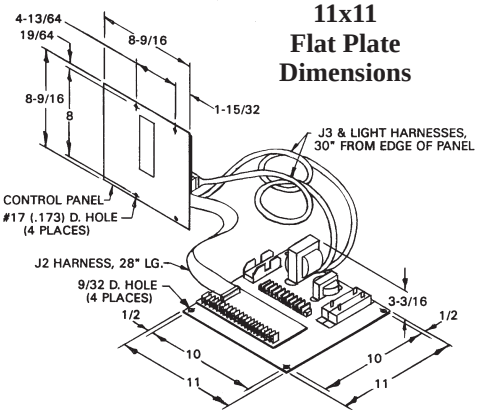


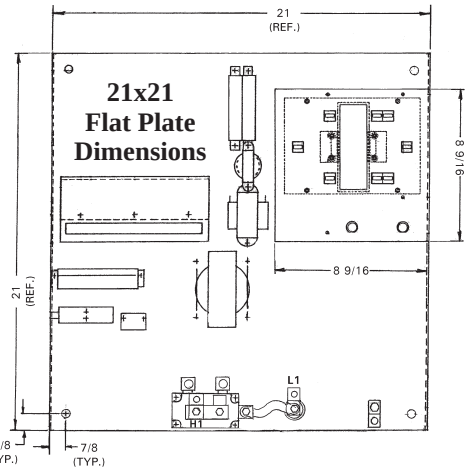


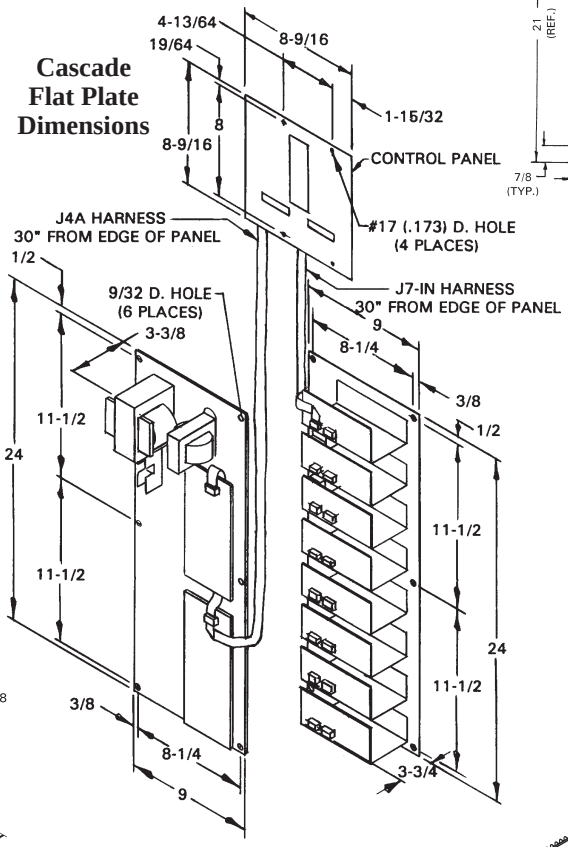


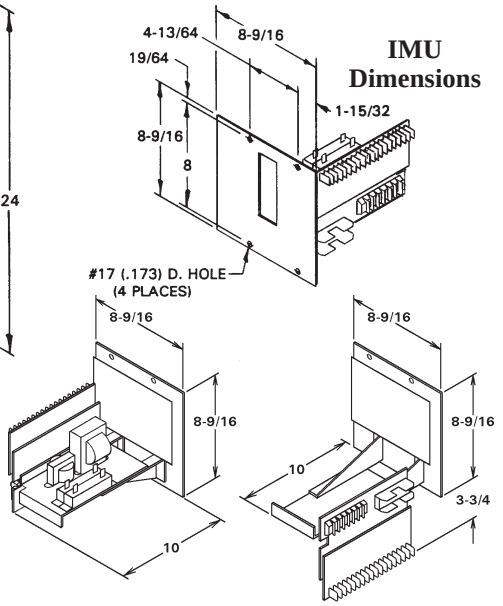



**T. J. SNOW CO., INC.**
1-800-NOW-SNOW
http://www.tjsnow.com

ENTRON™
ENTRON Controls, LLC.
601 High Tech Court
Greer, SC 29650
(864) 416-0190
FAX (864) 416-0195
www.entroncontrols.com
e-mail: info@entroncontrols.com


RWMA® MEMBER

780084-0707