VOLTZA® Transgun

Installation Guide

Ver. 2.5

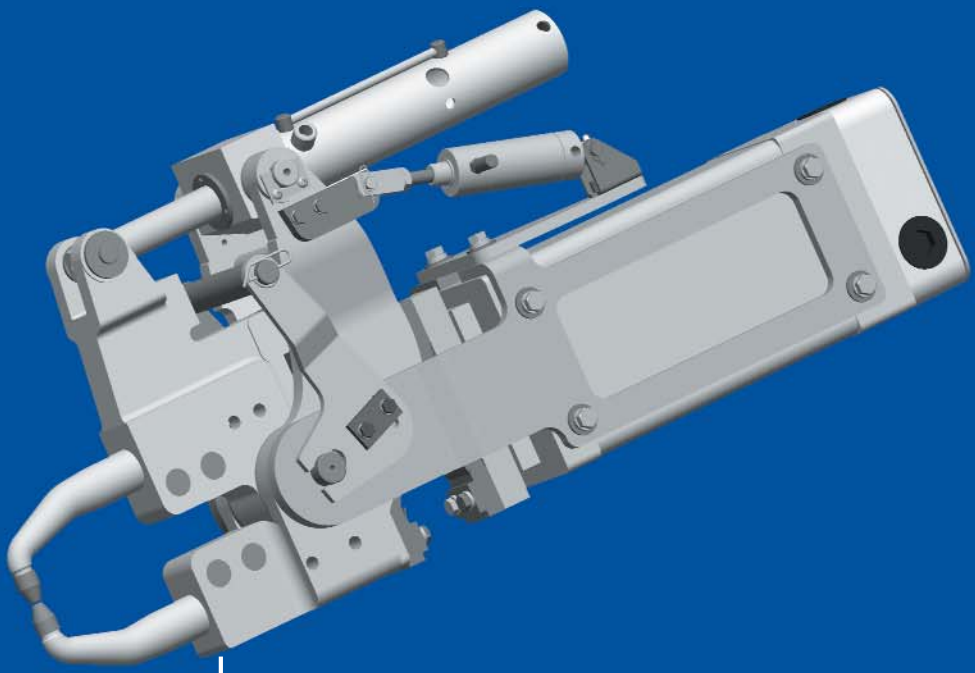

centerline®

(WINDSOR) LIMITED

IMPORTANT USER INFORMATION

Please Review Prior to Proceeding

To ensure the VOLTZA transgun installation is successful, it is imperative that users and/or installers adhere to the following guidelines. Failure to do so will render the VOLTZA transgun warranty null and void.

MANDATORY GUIDELINES

Before completing air and water connections to the VOLTZA Transgun package(s) users must purge all service lines to remove all contaminants that may have entered the system during installation work.

Before filling the CenterLine reservoir with the required fluid make sure the VOLTZA transgun(s) are fully retracted to their open position. This will guarantee the reservoir will not be overfilled. Overfilled reservoirs will exhaust excess fluid and contaminate the air system.

Before cycling the transgun package adjust the intensification adjust the intensification regulator(s) to a setting that does not exceed the setting shown on the transgun label. Exceeding this setting may damage the transgun electrodes and/or castings.

Water Supply

CAUTION: For both AC & DC welding, firing without water will cause permanent failure to transformers.

Flow requirement will depend on duty cycle, the following are general guidelines only.

- A **Series Circuit** may be utilized for fixture applications, the minimum requirement is 1 gallon per minute (GPM) **up to 5%** duty cycle for AC circuits, unless duty cycles increase, then a parallel circuit must be used. For DC welding, see below.
- A **Parallel Circuit** must be utilized for robot and portable applications, the minimum requirement is 3 gallons per minute (GPM) **over 5%** duty cycle.

For Service or Installation assistance contact:
info@cntrline.com
(519) 734-8330 or toll free (800) 268-8330

T. J. SNOW CO., INC.
1-800-NOW-SNOW
http://www.tjsnow.com

CONTENTS

1. System Requirements

This section outlines the minimum system requirements for the installation and use of the VOLTZA Transgun package. Through the addition of optional components the package can achieve customized operation. Please note that some components can be supplied directly from CenterLine while others must be customer supplied.

Table 1 Minimum System Requirements

Minimum System Requirements	Supplied by CL	Customer Supplied
VOLTZA Transgun (c/w transformer)	X	
Weld Control	S	X
Transformer Power Cable+	X	X
Fluid Reservoir	X	N/R
Reservoir Valves	X	X
Intensification Regulators	S	X
System Air Filter	S	X
Mufflers (2)	X	N/R
Water, air, oil, hoses and appropriate fittings		X
Rotary Bail/Trunnion*	X	N/R
Suspension System*	S	X
+For portable guns, must use shielded cable *Only for portable guns	N/R Not Recommended S Special Quote or Request X Available Component	

1.1 Minimum System Requirements

VOLTZA TRANSGUN

A rugged, highly efficient spot welding gun package that is mounted directly onto a compact transformer. The VOLTZA transgun's unique method of operation extends tip life, minimizes expulsion and part deformation and ensures maximum control of welding process and weld performance reliability.

WELD CONTROL

Controls reservoir valve sequencing and timing of the power to the primary side of the transgun weld transformer. Minimum control requirement is two valve outputs for a VOLTZA system & one additional valve output for blocking valve if blocking valve option is required.

TRANSFORMER CABLE

Power cable that connects the primary of the transformer to the weld control.

FLUID RESERVOIR

Supplies fluid to the OHMA cylinder. Design provides superior baffling to reduce fluid agitation and aeration, incorporates a translucent fiberglass barrel so that fluid level and the presence of contaminants can be monitored. Required for each transgun or group of transguns that are simultaneously cycled.

RESERVOIR VALVES

Two, 4-way valves mounted to the reservoir that control the sequence of air pressure to the OHMA cylinder, valves do not have to be mounted to the reservoir.

INTENSIFICATION REGULATOR

Controls the supply air pressure to the intensification valve. This is used to control transgun tip force.

AIR FILTER

Prevents contaminants that may be present in the air line from getting into pneumatic system. A pneumatic filter with a 10 micron element size or smaller is recommended for air cleanliness. Note: Element sizes less than 5 micron may affect performance by decreasing available air flow.

RESERVOIR EXHAUST MUFFLERS

Connected to the reservoir exhaust ports to diffuse exhaust air and reduce sound. Do not use sintered mufflers; they may restrict air flow and reduce performance.

*ROTARY BAIL & TRUNNION

A circular supporting device designed to provide 360° rotation to the VOLTZA hand held transgun package. The bail assembly supports the gun package at its center of gravity; this assures the operator maximum comfort in manipulating the gun package. The rotary bail satisfies rotation needs that are parallel to the weld plane. When in combination with an eye hook, a 3 axis rotation can be achieved.

NOTE: The rotary bail and trunnion are normally used in combination to provide total flexibility in gun movement. Some applications may only require the trunnion.

*SUSPENSION SYSTEM

An overhead system with a balancer to support transgun weight. It may include a rail system to increase the range of transgun movement. Safety standards recommened by the supplier should be used when installing any suspension system. The balancer provides vertical positioning of the portable transgun by the operator. The rail system allows the operator to move the gun in a horizontal direction.

*TRUNNION

A support "arm" used with the VOLTZA portable transgun package to provide pivot movements. The trunnion is used to achieve rotation perpendicular to the weld plane. When used in combination with an eye hook, a 2 axis rotation can be achieved.

*FIXED SUSPENSION BRACKET

A U-shaped bracket mounted to the sides of the transformer to allow the gun minimal movement. In combination with swivel hook allows for one axis movement.

Table 2 Component Availability

Components	Available through CenterLine	Customer Supplied
Blocking Valve	X	N/R
Pressure Switches	X	X
Reservoir Swivel Mounting Brackets (normally for robotic applications)	X	X
Advance Regulator (Delicate Touch)	S	X
Tip Positioning Cylinder	X	N/R
Counter Balance Cylinder	X	N/R
Transgun Pivot Units	X	X
Transgun Slide Units	S	X
Cylinder Safety Pivot Unit	X	N/R
Nut Detect Unit	S	
Proximity Switches	S	X
Gun Open Detect Unit	X	X
Cable Wrap	X	X
N/R Not Recommended S Special Quote or Request X Available Component		

1.2 Optional Components

BLOCKING VALVE

Blocks fluid flow between reservoir & transgun cylinder (OHMA cylinder) to provide a programmable retract function. This allows the gun to operate with various tip openings to clear flanges and bends, by closing onto the part, performing the weld, partially retracting, and going on to the next weld. The programmable retract function optimizes overall cycle time.

Caution: In order to maintain the blocked position, a constant (non-fluctuating) air supply must be applied to the blocking valve pilot.

PRESSURE SWITCH

An electrical switch, activated by air pressure, that verifies intensification air pressure is present at or above a preset minimum level. It is monitored by the weld control or PLC.

ROBOT MOUNTING BRACKET

Mounting interface between transgun & robot wrist connection.

ADVANCE REGULATOR (DELICATE TOUCH)

Controls the air pressure to the advance valve. Variable closing speeds may be achieved by adjusting this regulator.
Note: Flow controls should not be used with the OHMA cylinder as erratic cylinder operation will result.

TIP POSITIONING CYLINDER

Pneumatic cylinder connected to one of the gun arms. It allows for a positive location for both electrodes when making use of the programmable retract option (blocking valve).

COUNTER BALANCE CYLINDER

Designed to offset the weight of the transgun & casting to counteract the effect of gravity and minimize part distortion on thin gauge or lightly clamped parts. Requires a self relieving type regulator.

SELF RELIEVING REGULATOR

Regulator designed for quick exhaust; required for proper operation of the counter balance cylinder option.

TRANSGUN PIVOT UNIT

Allows gun assembly to be pivoted in an arc. This allows the gun to provide adequate part clearance for loading and unloading needs.

TRANSGUN SLIDE UNIT

Linear motion device comprised of a slide body and bar used for gun index motion.

CYLINDER SAFETY PIVOT UNIT

Pivots OHMA weld cylinder into throat of gun to provide part & hand clearance.

PROXIMITY SWITCH

Non-contact sensor that senses a specific target.

GUN OPEN DETECT UNIT

Normally a proximity switch and bracket assembly used to verify that the gun is in a fully open position.

1.3 Plant Services

The VOLTZA Transgun package requires compressed air, water and an electrical supply to function. The guidelines below must be adhered to in order to ensure the gun's proper operation.

WATER SUPPLY

Flow requirement will depend on duty cycle, the following are general guidelines only.

- A **Series Circuit** may be utilized for fixture applications, the minimum requirement is 1 gallon per minute (GPM) up to **5%** duty cycle for AC circuits, unless duty cycles increase, then a parallel circuit must be used. For DC welding, see below.
- A **Parallel Circuit** must be utilized for robot and portable applications, the minimum requirement is 3 gallons per minute (GPM) **over 5%** duty cycle.

- The differential water pressure across the transgun must be 20 PSI or greater to ensure proper water flow.
- Ideally the inlet water temperature should be above the dew point. A 65° - 70°F (18 - 21° C) range is often considered normal, do not exceed 86° F (30° C) after the load, since this will prevent the transgun and transformer from being adequately cooled.
- Water quality must be maintained. See cooling system supplier.

DC Welding Water Supply

Size 2 (100 kVA) & Size 3 (135 kVA) Transformers - require a minimum of 2 GPM
Gun Arms - require a minimum of 1 GPM for each arm, excluding the transformer

Size 4 (170 kVA) Transformers - require a minimum of 4 GPM
Gun Arms - require a minimum of 1 GPM for each arm, excluding the transformer

CAUTION:

For both AC & DC welding, firing without water will cause permanent failure to transformers.

See Figure 7 & Figure 8 for hook-up diagram.

AIR SUPPLY

Minimum typical supply pressure 60 PSI (do not exceed 100 PSI - maximum operating pressure), filtered and non-lubricated. The air supplied must be: clean, dry and free of contaminants. A pneumatic filter with a 10 micron element size or smaller is recommended for air cleanliness. Please note that element sizes less than 5 micron may affect performance by decreasing available air flow.

The table below outlines typical air consumption per cylinder cycle. Values are based on a 4" bore fluid reservoir. **See Figure 15 for explanation of cylinder sequence of operation.**

Table 3 Cylinder Air Consumption

Stroke Length	Air Consumption (SCF)*	
	80-50-80	100-100-100
1-1/2”	0.18	0.23
3”	0.21	0.27
6”	0.27	0.34

*SCF Standard Cubic Feet per cycle - the amount of air in standard conditions.
80-50-80 - 80 PSI Advance stroke, 50 PSI Intensification and 80 PSI Return stroke
100-100-100 - 100 PSI Advance stroke, 100 PSI Intensification and 100 PSI return stroke

Power Supply (Check transformer label)

For lower amperage welding:
• 460/575 Volts AC typical (VAC)
• Single phase 60 HZ
• Typical current requirement - 150/200 AMPS

For aluminum welding, DC voltage is recommended:
• 650/800 Volts VAC typical

• 3 phase 1000/1200 HZ
Certified electricians must perform the electrical hook-up of the VOLTZA Transgun.
See Figures 9-14 for typical pneumatic and electrical schematics.

2. Installation Requirements

This section describes various recommended practices for mounting the VOLTZA Transgun package. Begin by determining both the gun style and mounting system dictated by the application in order to select the proper method. In all cases, the gun must be mounted so that it remains secure throughout its operating life. Periodic checks of mounting integrity should be made to ensure safe and proper operation of the transgun package.

2.1 VOLTZA Transgun Styles - An Overview

PINCH GUN

This style makes use of two moving arms which pivot to close onto the part to perform the weld at the transgun's weld plane. This style is often used where part position, in relation to the transgun weld plane, remains constant.

"C" GUN

These transguns are divided into two groups, the equalizing "C" gun and non-equalizing "C" gun.

- **Equalizing "C" Gun** - features a one piece casting gun arm which is mounted to a CenterLine slide package. This sub-assembly is then bolted to the transformer resulting in a gun package that can automatically adjust to various part positions. The gun will initially stroke to the work and upon meeting resistance to its stroke will cause the opposing end to close onto the part. With the addition of a counter balance cylinder, this style of transgun can be operated with minimal shock.
- **Non-equalizing "C" Gun** - will not equalize to the part. It is normally used where the part rests on the lower electrode (ie nut welding applications).

Contact CenterLine for specific guidelines pertaining to any other custom transgun style.

2.2 Moving the VOLTZA Transgun into Position

To properly move the VOLTZA Transgun install eyebolts to the transformer mounting holes and lift the complete gun assembly with the aid of a proper lifting device such as an overhead crane. A safety harness should be used to prevent any accidental dropping.

2.3 Mounting Considerations

Fixture Mount (Figure 1)

- A minimum of 4 bolts should be used in mounting.
- A common bracket should be designed and the guns mounted with the use of shim packs for position adjustment needs. Use of shim packs will also prevent future mounting problems should gun packages be replaced with the same style gun assembly. Transformer and casting manufacturing tolerances make it impossible to maintain exact dimensional specifications; the use of shim packs compensates for this situation.

- For pinch gun style, if the transformer mounting holes, which are used to bolt the transgun side mounting plates, are needed, simply remove the existing bolts and install longer bolts which will extend through the side mounting plates, stop link and into the transformer.

FIXTURE MOUNT WITH PIVOT UNIT
FIGURE 1

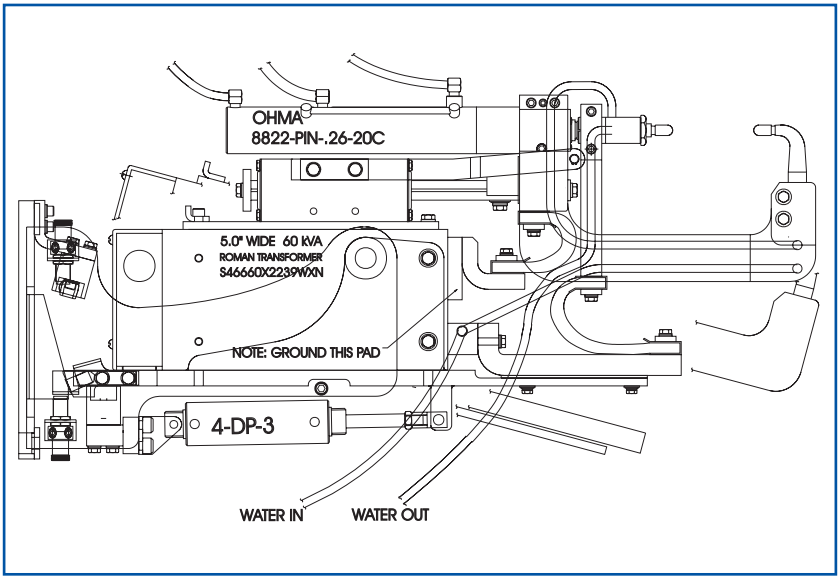

INDEXING GUN APPLICATIONS

- Guns which will be shuttled to the part by means of slides or transgun pivot units, should be mounted using a minimum of 6 mounting holes.
- Use restrictors or flow controls to help control slamming

ROBOT MOUNT (FIGURE 2)

- A minimum of 6 mounting holes must be used to mount the robot bracket to the transformer.
- Robots move at various speeds thus applying a variety of inertial loading to the mounting configuration. Do not compromise mounting strength when dealing with robot applications. This may necessitate the use of more mounting holes.

ROBOT MOUNT
FIGURE 2

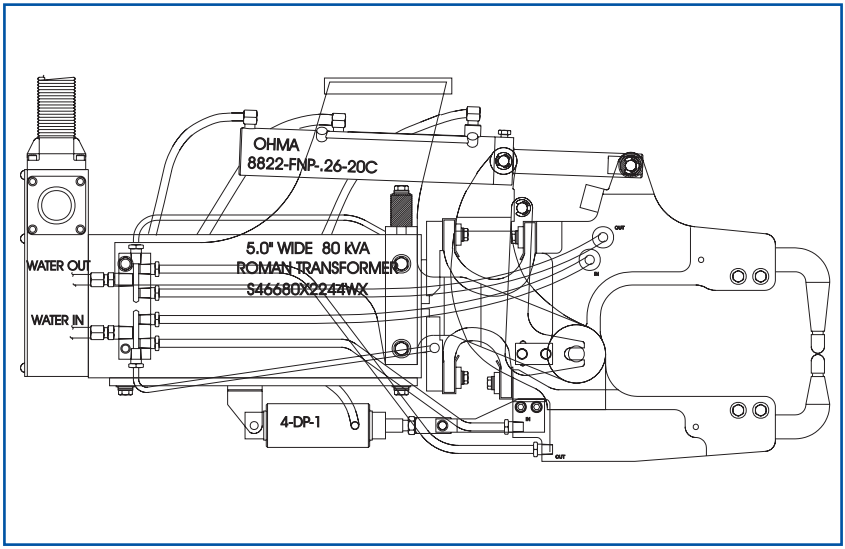

PORTABLE MOUNT (FIGURE 3)

This gun style is pre-attached to a bail and/or trunnion assembly. An eye bolt connection is provided on the trunnion arm. A safety cable and safety chain installed to the balancer is recommended.

BAIL & TRUNNION
FIGURE 3

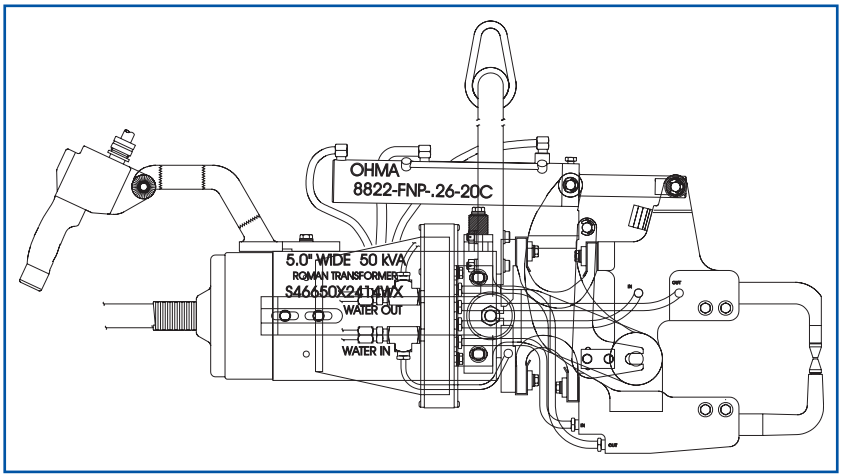

2.4 Weld Plane and Gun Bias Orientation

WELD PLANE

Mounting the gun in relation to part position is an important factor in obtaining consistent weld quality. An important consideration is the gun's closing position with respect to the weld plane. The weld plane can be defined as follows:

For Pinch Gun: The weld plane is the plane that bisects the pivot pin and the interface of the weld electrodes with the gun closed in the design weld position. **(Figure 4)**

"C" Gun (straight acting): The weld plane is a plane perpendicular to the longitudinal axis of the weld cylinder stroke which bisects the interface of the weld electrodes in the gun closed design weld position.

The pinch style gun should not be operated with the part above or below the gun's weld plane, as this will cause the gun to force the part into position resulting in either part deformation or tip misalignment. To correctly orient the gun, the part's "weld plane" must be in line with the pivot point of the gun. Although the gun has the ability for minor equalization, positioning the gun so that the part is as the weld interface will prevent the gun from forcing the part out of position.

GUN BIAS

VOLTZA Transguns are manufactured with a unique stop link assembly which is used to interrupt the movement of the castings that are connected to the cylinder. For the pinch style guns, the stop link can be rotated to effect various bias settings (the amount of gun opening per gun arm). This important feature allows the gun to accommodate various part characteristics such as bends or flanges. Once the bias is adjusted by the position of the stop link, it can be locked in place during final installation to produce repeatable gun opening and closure.
A spot weld on each side of the stop link can ensure the stop link from moving.

Warning: excessive bias setting may cause premature shunt failure. Contact CenterLine for advice prior to making any adjustments.

WELD PLANE
FIGURE 4

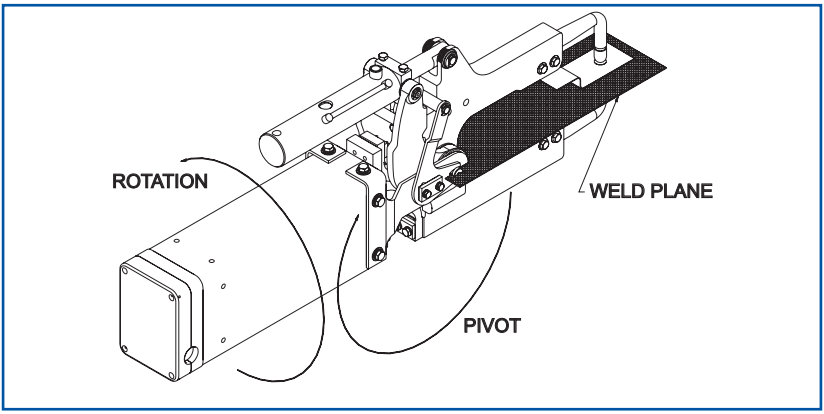

2.5 OHMA Cylinder Orientation to Ground

The OHMA cylinder is manufactured so that six possible port locations can be realized. The cylinder mounting block includes six tapped holes at 60° increments. A combination of three of these holes are used to attach the block to the cylinder barrel thus allowing the barrel to be rotated about the mounting block in 60° increments.

FIGURE 5

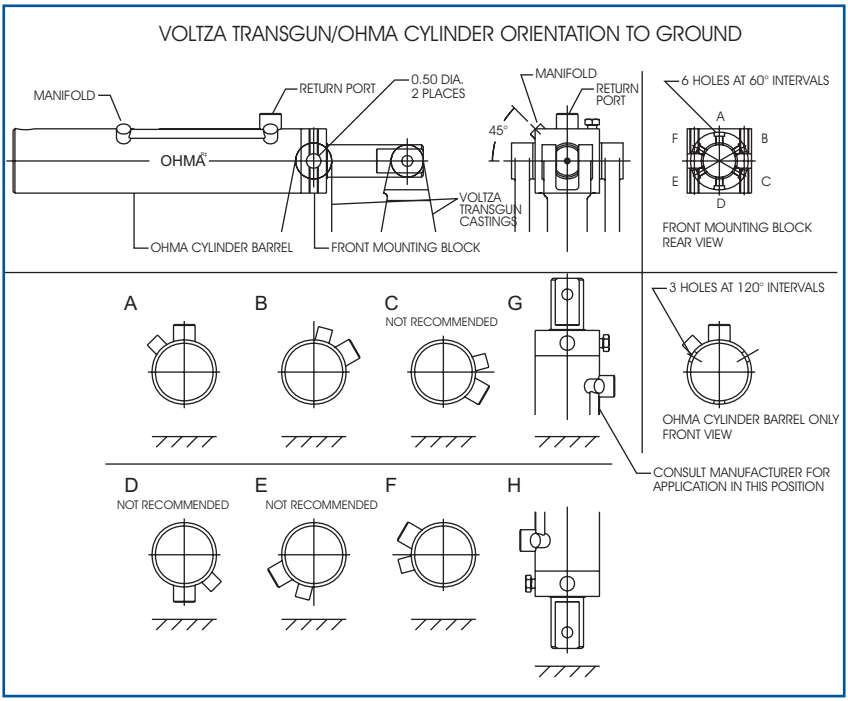

Correct OHMA cylinder port positioning will ensure proper VOLTZA Transgun operation. Ports should always be positioned to allow fluid flow to follow a downward path from fluid reservoir to cylinder. Position "A" as shown in Figure 5, is the standard orientation of cylinder to ground. Positions "C", "D" and "E" are **not recommended** for cylinder operation. If such an adverse condition exists, please contact CenterLine for instructions.

2.6 Mounting the Reservoir

Once the VOLTZA Transgun has been mounted, the next step is to mount the fluid reservoir. Proper orientation of the reservoir to the gun package will ensure optimum system performance.

1. Mount the fluid reservoir as close to the transgun's OHMA cylinder as possible with the reservoir fluid port above the cylinder's "ADVANCE" port (Figure 15). If a manifold is being used with the system to distribute fluid to more than one OHMA cylinder, the manifold inlet port must be at least the same size as the reservoir fluid port. This manifold should be positioned above the cylinder's advance port and below the reservoir fluid port.

2. To permit natural bleeding of the system the fluid lines should be routed in a continuously upward direction from the OHMA cylinder to the fluid reservoir. By following this simple rule any air introduced into the system will naturally return to the reservoir and escape to atmosphere. Failure to comply with this condition may result in a loss of output force due to air being trapped in the fluid line feeding the OHMA cylinder.
3. For all ports use either brass or steel fittings that are free of rust and dirt. At no time should hydraulic fittings be used with an OHMA cylinder as they restrict the flow of fluid resulting in slower transgun operation.
4. For all lines use fluid compatible air hose or low pressure hydraulic steel tubing with a suitable I.D. that will not restrict flow. Consult the following table for sizing the hose or tubing used to install the reservoir.

Table 4 Hose and Tubing Size

FUNCTION	BORE SIZE (in.)	MIN. LINE SIZE (in.)	MAX LINE LENGTH (ft.)
Air	2 or less	3/8	20
Fluid	2 or less	1/2	10
Fluid	2 5/8 or less	3/4	20

5. Connect the fluid reservoir to a filtered air supply (see **"3. Plumbing Instructions").**
6. Refer to the diagram/instructions in section "3.1 Pneumatic Hook-up" for additional information.
7. If hydraulic hose is used per end user specifications, increase the hose size to accommodate the flow rate.

Additional Notes:

- Guns with similar tip ratios that cycle simultaneously may be operated from a common, properly sized and plumbed, reservoir circuit.
- Use of IV poles is recommended for mounting reservoirs for robotic applications.
- **Do not use a lubricator in the system:** The **OHMA** cylinder and CenterLine reservoir packages are self lubricating. Adding a lubricator will introduce excess fluid to the system and this surplus will be expelled from the system in the form of a fluid mist in the exhaust or, in extreme cases, seep past the cylinder working piston seal to collect on the piston and contaminate the gun. If a lubricator is needed for other equipment on the machine this should be incorporated after the air line which feeds the reservoir package.
- **A Check Valve** hookup option is available for robotics and portable applications. This configuration causes the fluid to **circulate** through the cylinder and reservoir rather than simply moving back and forth. The design of this configuration permits the reservoir to be located in virtually any position in relation to the transgun cylinder location and permits any air that may enter and contaminate the system to bleed back through the reservoir without adversely affecting cylinder operation.

Contact CenterLine if these mounting conditions can not be met. CenterLine personnel are available to review alternate mounting configurations.

3. Plumbing Instructions

CAUTION: Prior to any pneumatic hookup, flush all air lines of contaminants.

3.1 Pneumatic Hook-up (Figure 6)

1. Connect the **PLANT AIR SUPPLY** to the inlet port of a **FILTER** which is sized for the system.
2. Tee the outlet port from the **FILTER** to provide air to the "**RETURN AIR IN**" port on the fluid reservoir and **INTENSIFICATION REGULATOR**.
3. Connect the **INTENSIFICATION REGULATOR OUTPUT** to the "**INTENSIFIER AIR IN**" port on the reservoir.
4. Connect the "**RETURN CYLINDER**" port on the fluid reservoir to OHMA cylinder **RETURN PORT (AIR)**.
5. Connect the "**INTENSIFICATION CYLINDER**" port on the fluid reservoir to the cylinder **INTENSIFIER PORT (AIR)**.
6. Connect the "**FLUID OUT**" port on the fluid reservoir to the OHMA cylinder **ADVANCE PORT (FLUID)**.
7. Put mufflers on the **EXHAUST PORTS (2)** of the fluid reservoir. Mufflers are normally supplied by CenterLine.
8. Finally, with the OHMA cylinder retracted (transgun fully open position), fill the reservoir with the recommended fluid type. (See "3.2 Fluid Types").

Note: Use of hydraulic fittings will restrict the flow of fluid to the cylinder. Since the fluid pressure in the hose/tubing is not above the system air pressure supplied by the user, standard air fittings should be used.

FIGURE 6

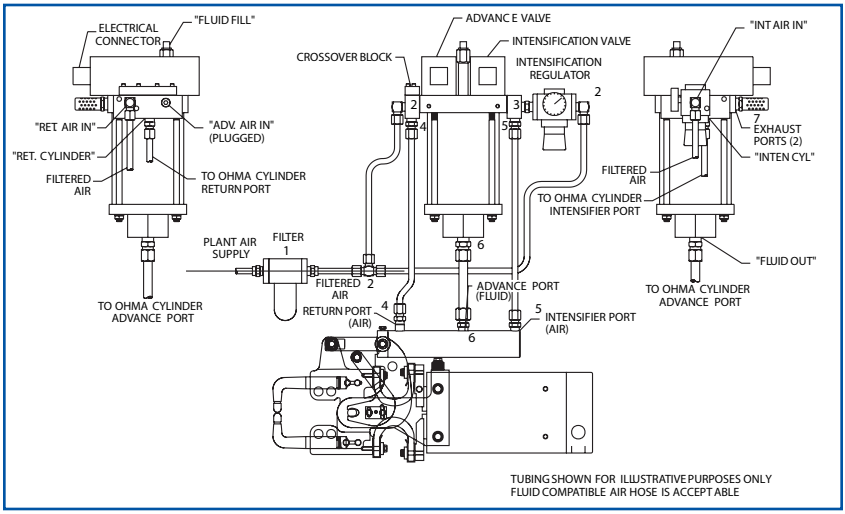

3.2 Fluid Type

OHMA cylinders utilize a combination of BUNA 'N' (Nitrile) and polyurethane seals. Light weight fluids that are compatible with these materials are recommended.

Typical fluid characteristics include:

- low viscosity to maximize speed (not more than ISO 22 @ 40° C)
- normal (10-50° C) operating temperature
- no phosphate ester components

Note: maximum pressure developed by cylinder in reference to fluid at 100 PSI:

1-1/2" Bore: 905 psi	2" Bore: 1592 psi
1-3/4" Bore: 957 psi	2-5/8" Bore: 1756 psi

These standards must be followed to optimize cylinder operation.

RECOMMENDED FLUIDS

Eppert	Eppco Spindle Oil (ISO22)
Imperial Oil	Nuto A22
Mobil	Velocite #10, DTE 22
Petro Canada	Harmony AW22
Shell	Tellus 22
Sunoco	Sunvis 922
Texaco	Spindura Oil 10
Exxon	Spinesstic 22

Synthetic Fluids

Quaker	Quintolubric 880
Houghton	Cosmolubric 130 HF

Contact CenterLine for additional information regarding any fluids that are not on this list.

3.3 Typical Series Water Connection

The VOLTZA Transgun is water cooled. Depending on the type of application and duty cycle, there are two basic methods of connecting the gun package to the water supply: series and parallel.

Use the **series connection** method for low duty cycle operation (5%). Use **parallel** for applications exceeding a 5% duty cycle.

FIGURE 7

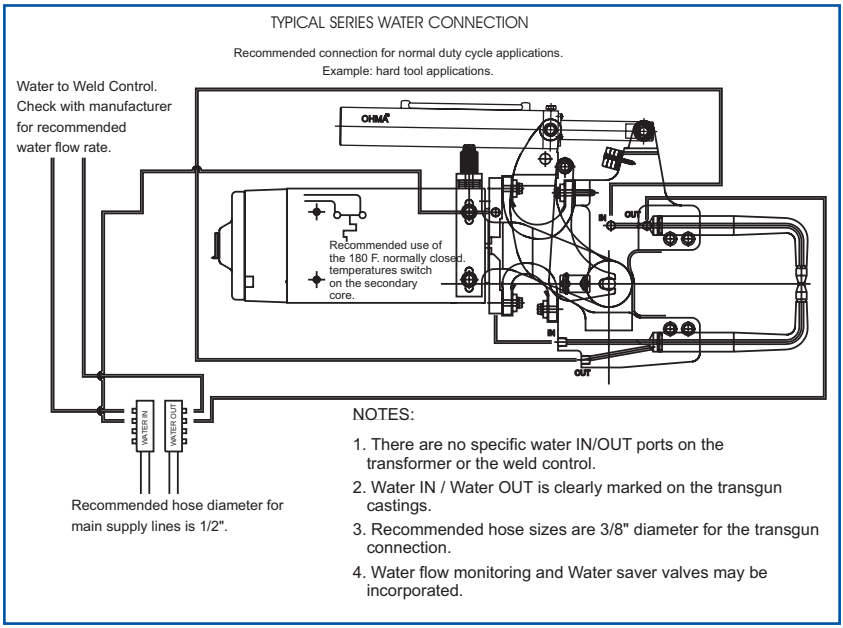

3.4 Typical Parallel Water Connection

FIGURE 8

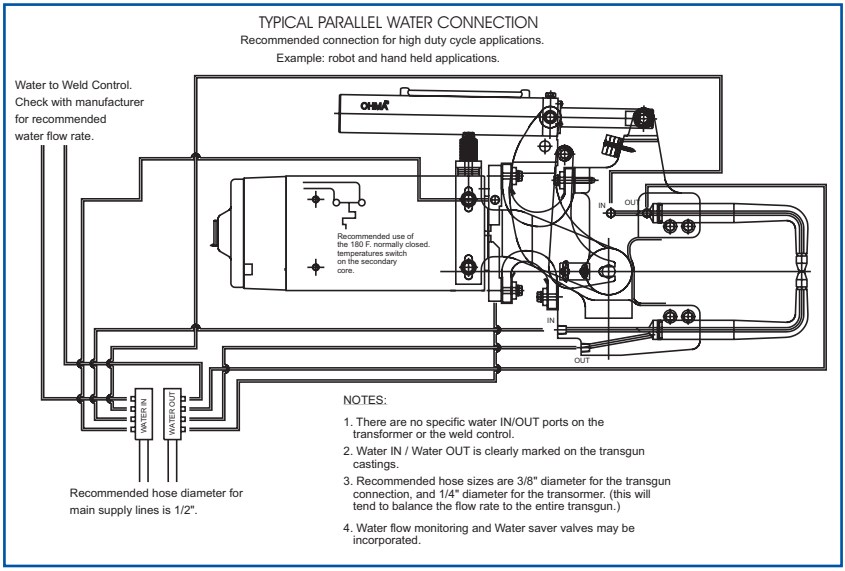

3.5 Pneumatic System Configurations

There are three (3) common pneumatic hook-up configurations:

1. Standard Hook-up
2. Blocking Valve/Tip Positioning Cylinder
3. Self-Relieving Regulator/Counter Balance Cylinder **(See Figures 9, 10 & 11)**.

The versatility of the VOLTZA Transgun package allows it to be operated in a number of ways. Contact CenterLine to discuss any unique application that may require special hook-up considerations.

3.6 Standard Hook-up

FIGURE 9

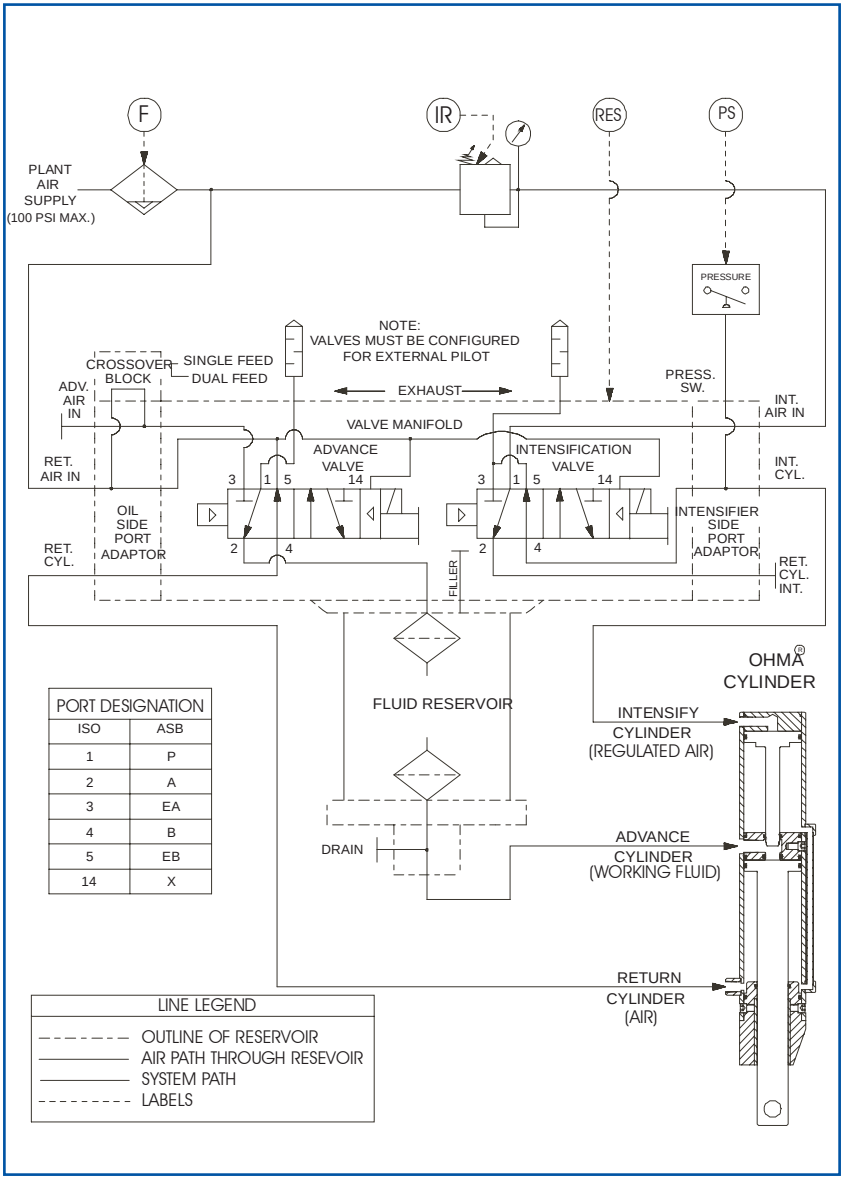

3.7 Standard Blocking Valve, Tip Positioning Cylinder Hook-up

FIGURE 10

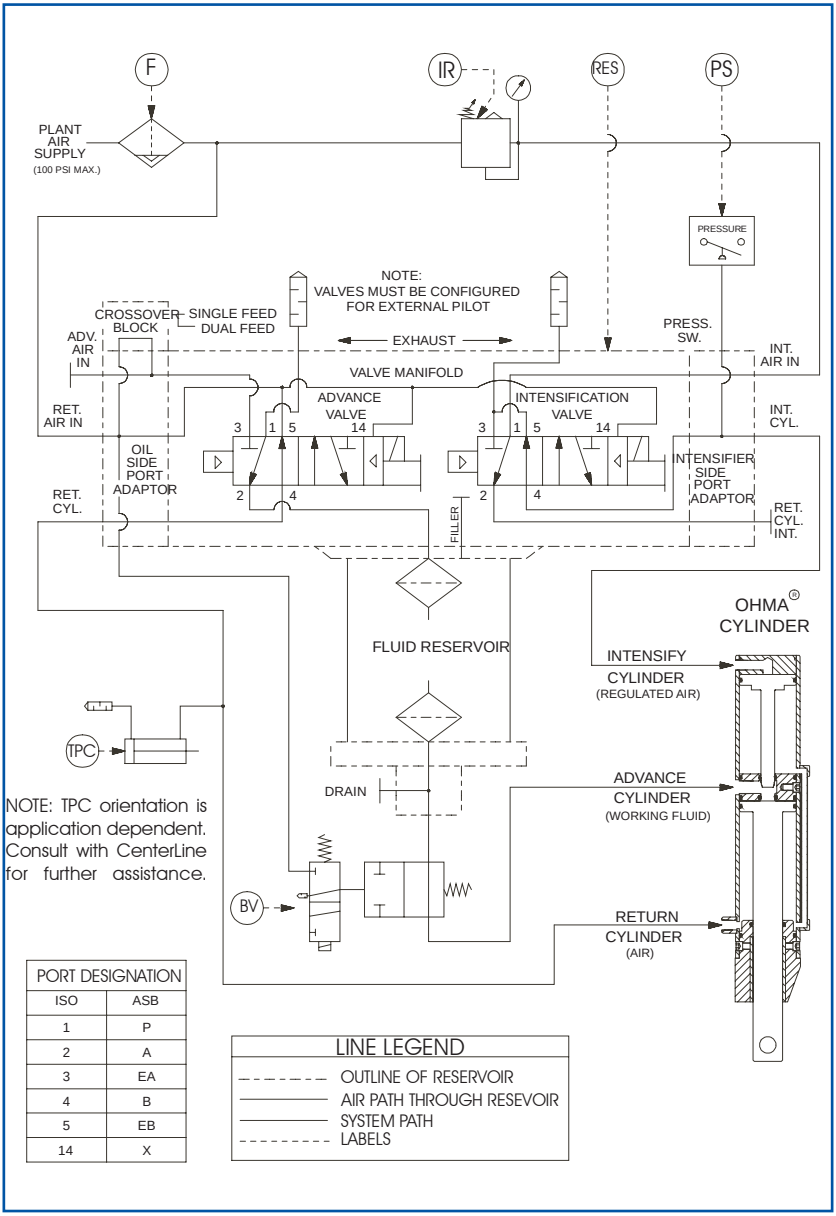

3.8 Self Relieving Regulator/Counter Balance Cylinder Hook-up

FIGURE 11

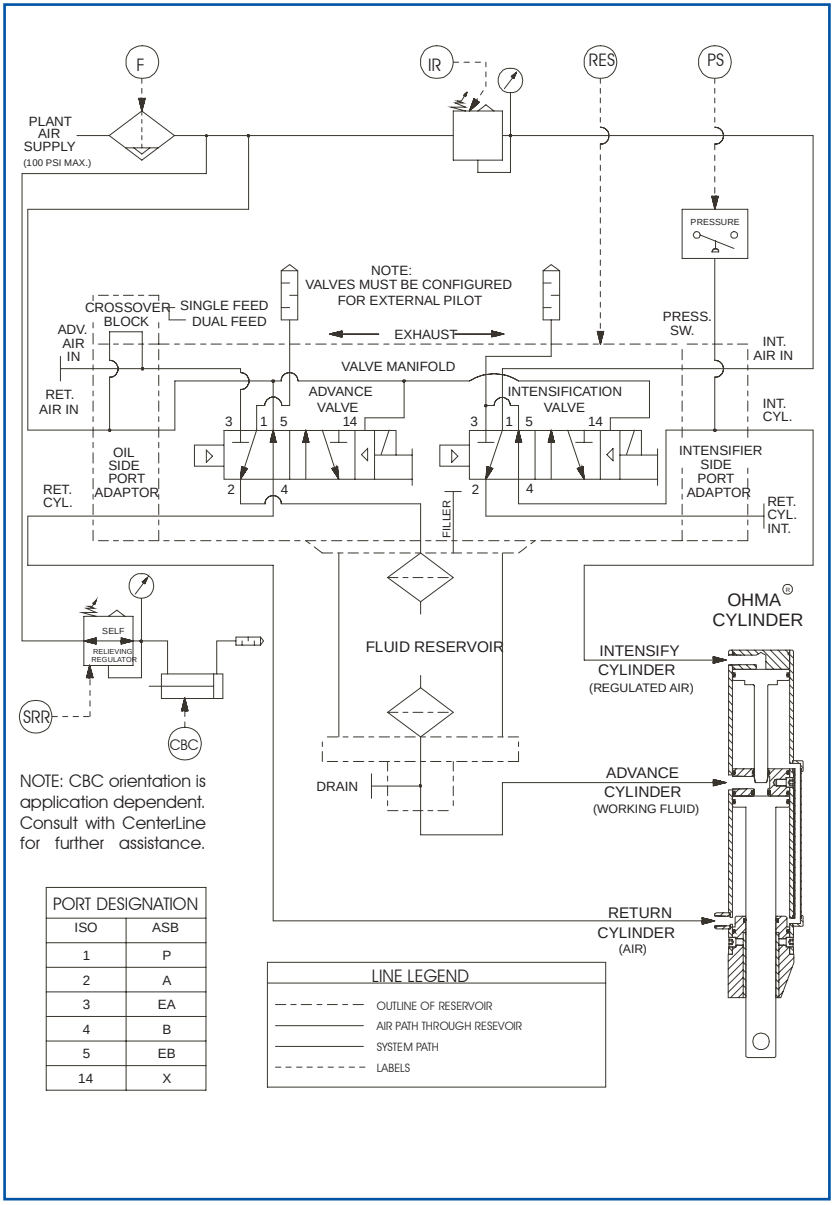

NOTE: CBC orientation is application dependent. Consult with CenterLine for further assistance.

PORT DESIGNATION	
ISO	ASB
1	P
2	A
3	EA
4	B
5	EB
14	X

4. Electrical

All electrical connections must be performed by a qualified electrician. The diagrams which follow show two connection options: standard and hand held hook-up. The CenterLine cable contains the necessary leads to effect primary connection as well as the thermal switch and ground. The hand-held hook-up has an additional ground check lead that must be utilized as part of the ground verification circuit. Contact CenterLine to receive information pertaining to ground fault requirements for hand-held applications.

4.1 Cable Hook-up

FIGURE 12

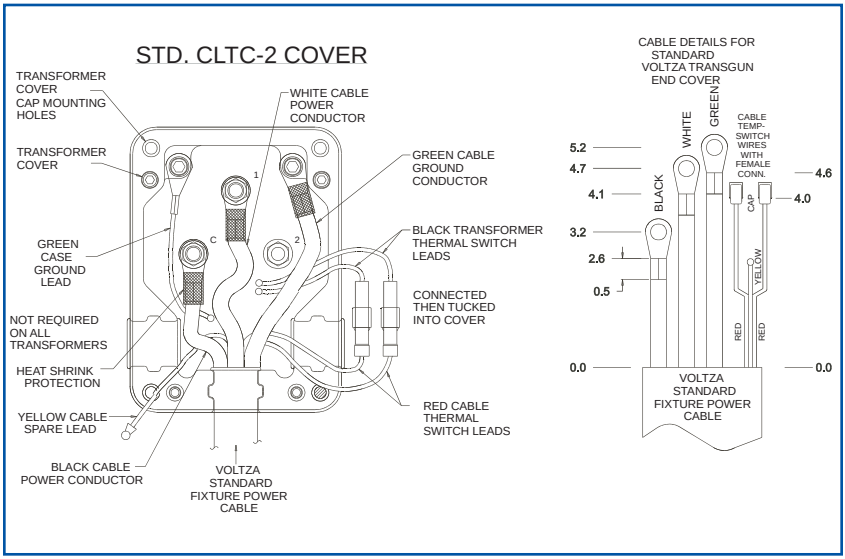

4.2 Hand Held Hook-up

FIGURE 13

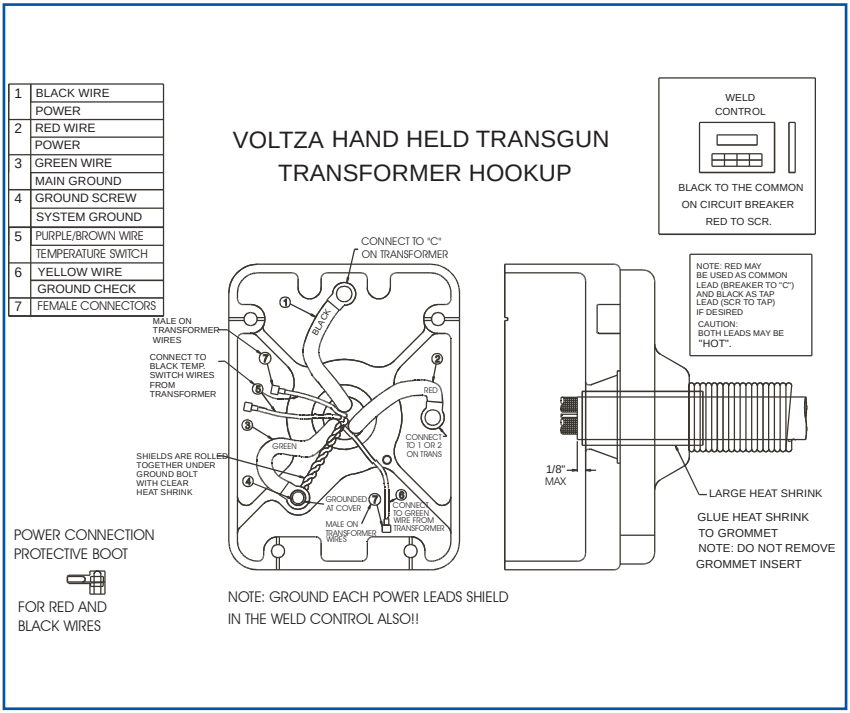

4.3 Firing Handle

FIGURE 14

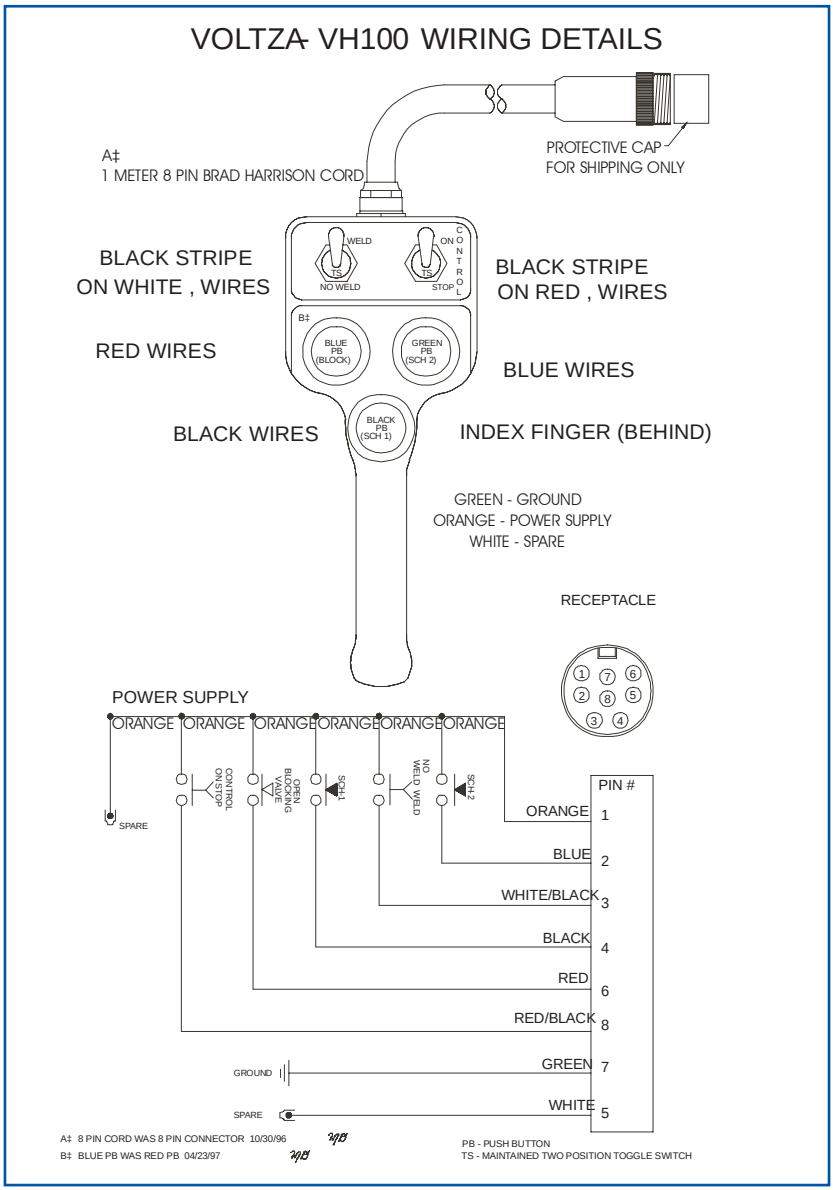

5. Operating Instructions

Perform the following steps for initial start-up and operation of the VOLTZA Transgun package. Note that in addition to this booklet, CenterLine provides a detailed maintenance manual with all transgun orders. Refer to this manual for specific information concerning particular gun style(s) used on the tool/project. Additional copies can be purchased by contacting CenterLine.

5.1 Installation Review

Complete the following checklist to verify that the gun package(s) has been properly installed:

- ☐ All bolts used to mount the gun are secured in place with lock washers.
- ☐ With the part in the gun throat, the gun has been set to weld at the weld plane.
- ☐ The gun transformer has been properly connected to the weld control and a ground strap has been installed on the transformer secondary.
- ☐ The cooling circuit is connected, there are no kinks in any of the lines, all fittings have been tightened and checked for leaks.
- ☐ Verify proper hose sizing by reviewing the chart in section 2.6.
- ☐ The OHMA cylinder is positioned so that the fluid line travels continuously upward to the reservoir and there are no loops, bends or kinks in the hosing.
- ☐ The fluid line is as short as is practical.
- ☐ Fluid lines which run to a manifold are approximately of equal length to other gun packages being fed from the same manifold. The manifold is above the cylinder fluid port.
- ☐ The fluid line is connected to the fluid port of the reservoir package.
- ☐ The plant air supply line is connected through a properly sized filter to the "return air in" port of the reservoir.
- ☐ The return air line from the OHMA cylinder is connected to the "return air out" port of the reservoir package.
- ☐ The intensification line from the OHMA cylinder is connected to the "intensifier out" port of the reservoir.
- ☐ The electrical connections to the valves have been checked against the electrical schematic.
- ☐ The reservoir is filled to its indicated level with all guns fed from the reservoir in open position.

5.2 Start-up

The following steps must be performed with no electrical service to the system.

1. Turn on the air supply, increase the main air supply regulator to (approximately 20 - 30 PSI). Set intensification regulator at 0. This action should cause the gun to fully open. If not, slowly increase the pressure until gun is fully open.
2. Check pneumatic system for air leaks and verify that the gun is fully opened. If gun does not fully open, it may be a mechanical problem, improper connection, or the air is not hooked up properly.
3. Activate the manual override on the advance valve 3 to 4 times to close the gun. This will bleed any air that may have entered the fluid lines during installation. Check for interference, misalignment, poor hosing placement and other possible concerns. At this stage the likelihood of serious damage to the tool is slight.
4. Re-check fluid level in the reservoir. All OHMA cylinders must be in the returned position (gun open) to prevent the possibility of overfilling the reservoirs. If overfilled, remove excess fluid through the reservoir drain port.
5. Next, adjust the intensification regulators. Each gun package has a VOLTZA Transgun label affixed to it which specifies the tip ratio. The weld force developed by the gun is determined by this ratio. The intensifier regulator must not exceed the recommended forces indicated on the label. A good practice is to check all tip forces with a weld force gauge to detect areas which may not be functioning properly. Should the gun not be developing the proper weld force, check the system for leaks, trapped air or mechanical problems. To set the initial weld force adjust the intensification regulator to the air pressure setting required to produce the desired weld force. This should be below the minimum available system pressure to ensure consistency.
6. Next, turn on the water and ensure that it is properly flowing through the entire cooling circuit.
7. Verify all flow meters in the system for proper flow and check for water leaks.
8. **Certified electrical personnel must check all electrical connections.**
9. **CAUTION:** Firing the guns without water will cause permanent failure to the transformers.

Once assured that all system features are functioning properly, you may now begin developing a weld schedule to produce the welds. This stage of the process involves fine tuning the schedule, weld force, and any automatic features of the tool such as shuttles and transgun pivot units. This task must be performed by personnel qualified to operate the weld control and knowledge of the welding process.

5.3 OHMA Cylinder Sequence of Operation

The OHMA cylinder has a unique method of operation. Its simple design allows it to be easily controlled for a variety of applications.

Stage 1: Cylinder At Rest Position:

At this stage, return air pressure is present at the Return Port (Port EE1) to maintain the working piston and intensifier piston retracted. Port EE3 (Intensifier Port) and the fluid reservoir are vented to atmosphere. Ports EE1 and EE2 are operated with an advance/return valve and EE3 is operated with an intensification valve.

Stage 2: Low Pressure Advance:

To initiate the low pressure advance stroke, air pressure is directed to the top of the fluid reservoir to force fluid to move into the OHMA cylinder via Port EE2 (Advance Port). The low Pressure fluid causes the working piston to stroke forward at low pressure. Ports EE1 and EE3 are vented to atmosphere.

Stage 3: Power Stroke (Weld Stroke):

Regulated air pressure is applied to Port EE3 to drive the intensifier piston forward. The piston advances through the middle separator to block incoming fluid at EE2 and seal the OHMA cylinder fluid chamber. As the intensifier piston strokes into the fluid, trapped fluid is displaced to produce the power stroke.

Return Stroke:

To return the cylinder to rest position air pressure is again directed to Port EE1 while EE2 and EE3 go to atmosphere pressure simultaneously. This causes both pistons to return to their retracted positions.

FIGURE 15

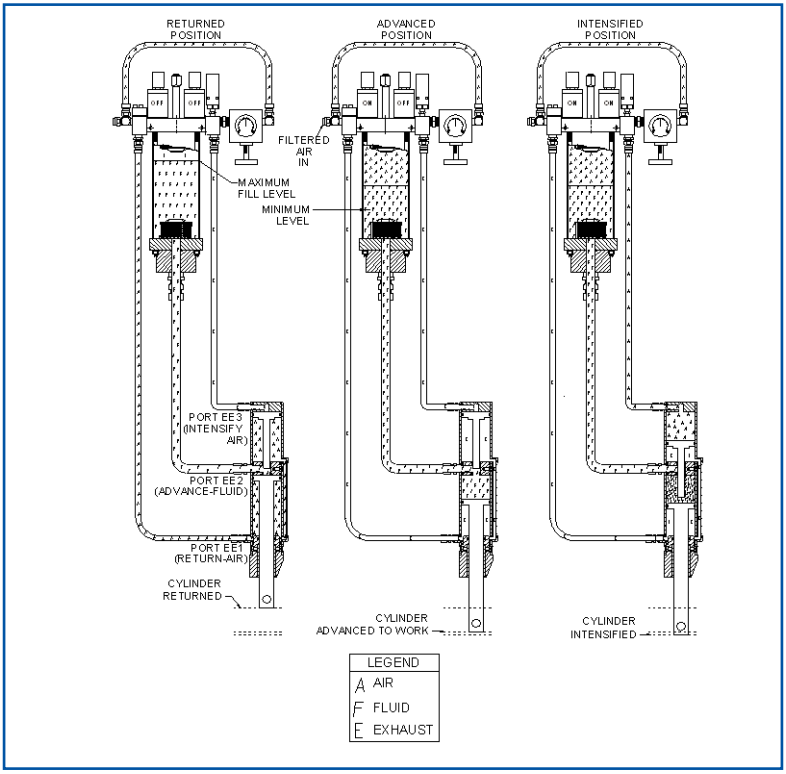
RETURNED POSITION
ADVANCED POSITION
INTENSIFIED POSITION
OFF
OFF
ON
OFF
ON
ON
FILTERED AIR IN
MAXIMUM FILL LEVEL
MINIMUM LEVEL
PORT EE3 (INTENSIFY AIR)
PORT EE2 (ADVANCE-FLUID)
PORT EE1 (RETURN-AIR)
CYLINDER RETURNED
CYLINDER ADVANCED TO WORK
CYLINDER INTENSIFIED
LEGEND
A AIR
F FLUID
E EXHAUST

5.4 Cylinder Section View - Generic

FIGURE 16

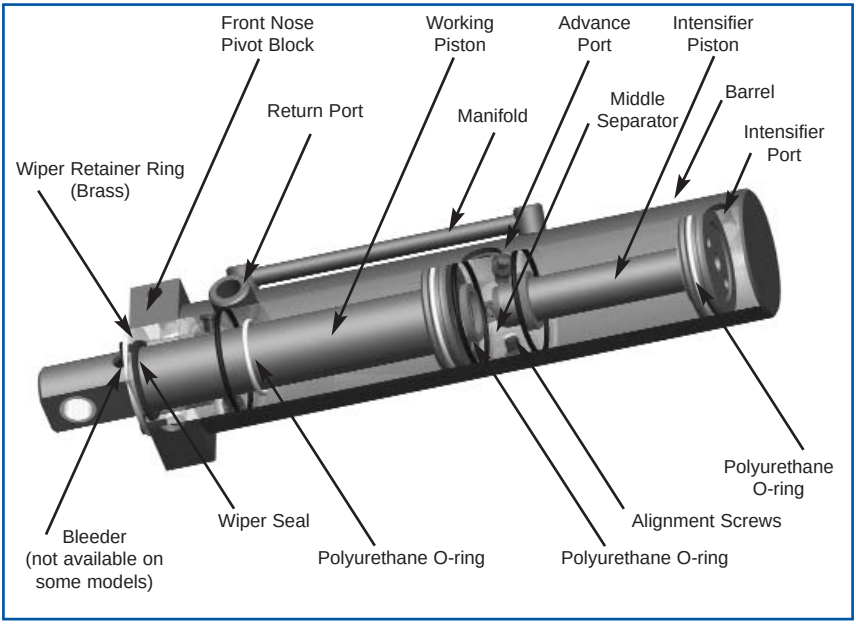

5.5 VOLTZA Transgun Label Data

All VOLTZA Transguns are shipped with a descriptive label that provides specific information about each gun package. The label on each VOLTZA Transgun contains valuable information about your equipment. The diagram below identifies what is included on each label.

1. Model Number
2. Serial Number
3. Tip Ratio
4. OHMA® Cylinder Model Number
5. Air Pressure for 900 lbs. Tip Force
6. Max. recommended intensifier regulator setting

FIGURE 17
FOR ILLUSTRATION ONLY

VOLTZA® TRANSGUN
GUN MODEL NO. CLTG-9558-17
SERIAL NO. 7434 Tip Ratio 20:1
OHMA® CYLINDER
CYL. NO. 8822-FNP-.26-16C
Gun Yields 900 lbs Tip Force at 45 PSI
Maximum recommended intensifier regulator setting 65 PSI
Any modifications will affect unit performance & life and absolves the manufacturer of any responsibility for product performance.
For more information call CenterLine (519) 734-8330.

Note the following:

1. Manufacturer places label on VOLTZA Transgun after testing the product.
2. An additional label is included with the packing slip. Customer should affix matching label on the reservoir that is connected to the transgun. Place it near the intensification regulator.
3. Customer should cross reference this additional label with Gun model # & serial # indicated on the transgun package.
4. **Warning!! Do not exceed maximum recommended intensifier regulator setting as shown on transgun label.**

6. Troubleshooting

6.1 Cylinder Rod Won't Return

FIGURE 18

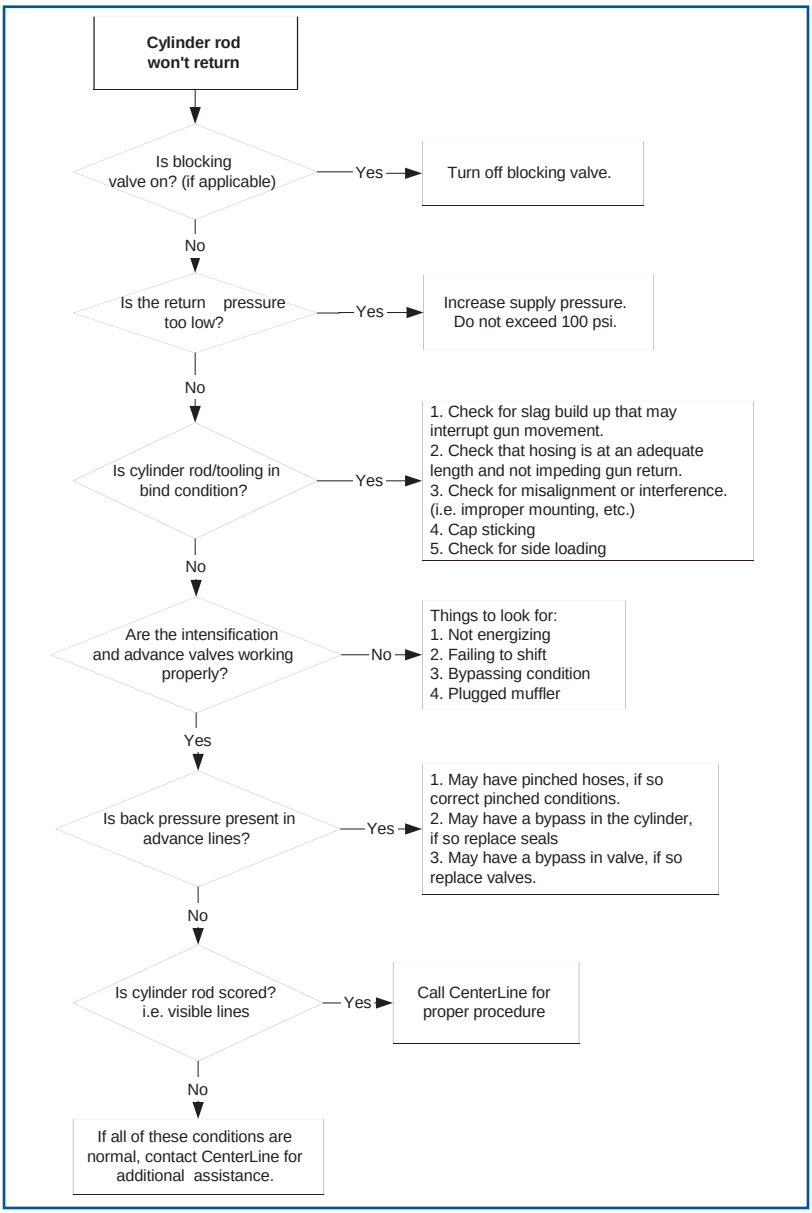

6.2 Transgun Will Not Close Properly

FIGURE 19

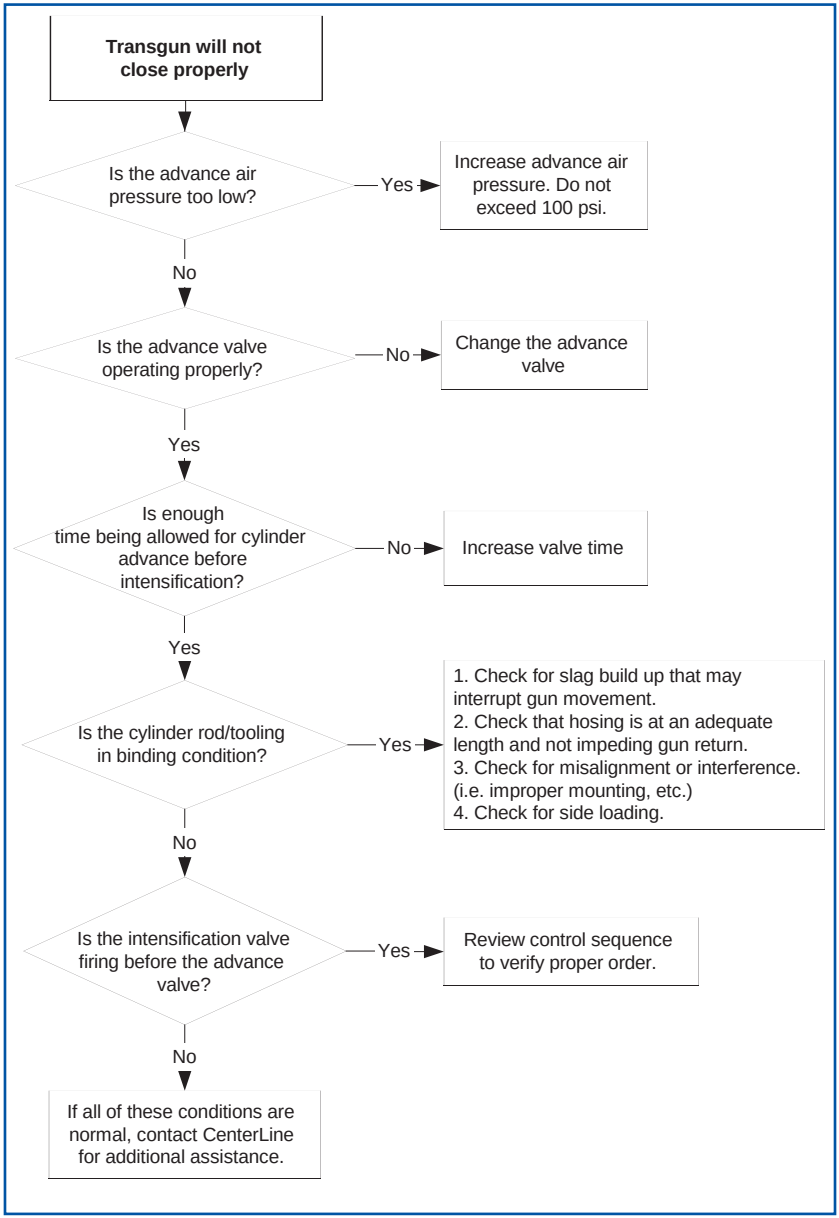

6.3 Transgun Operation Too Slow

FIGURE 20

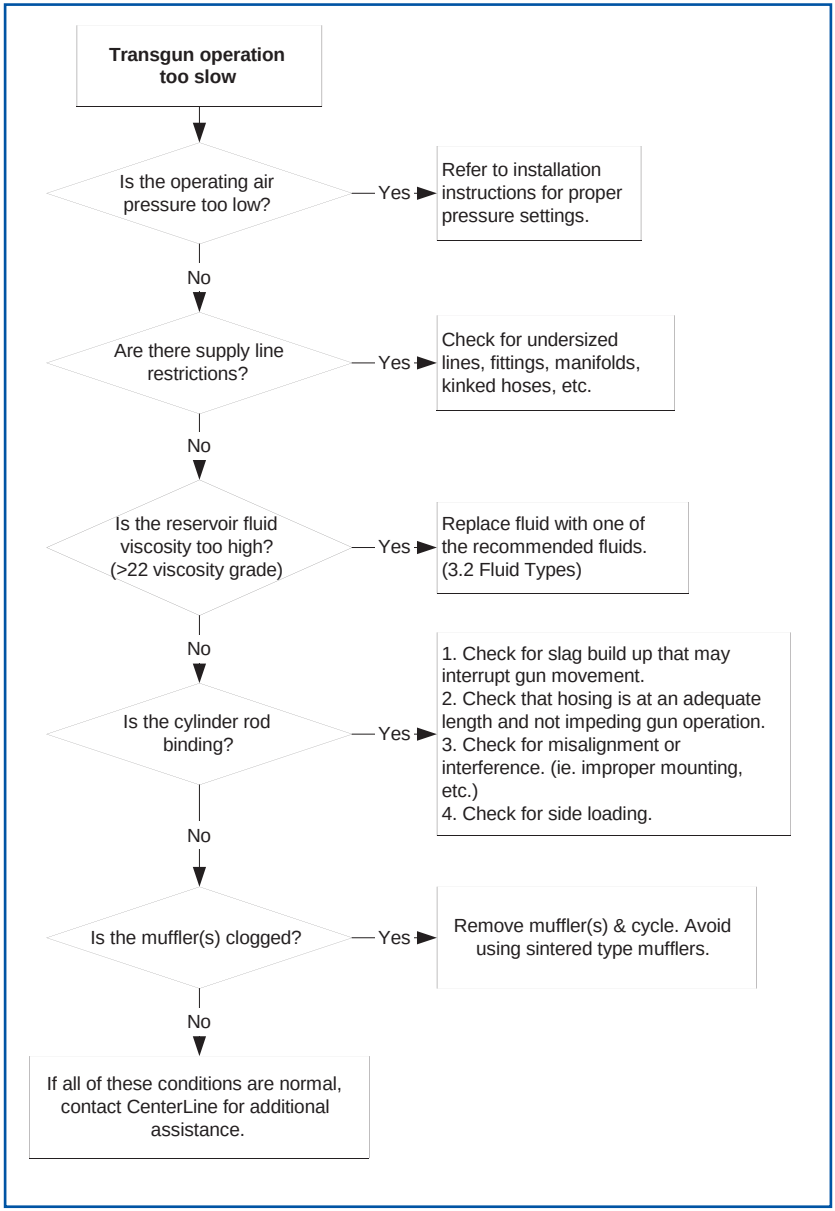

6.4 Inconsistent or Lack of Proper Intensification Stroke

FIGURE 21

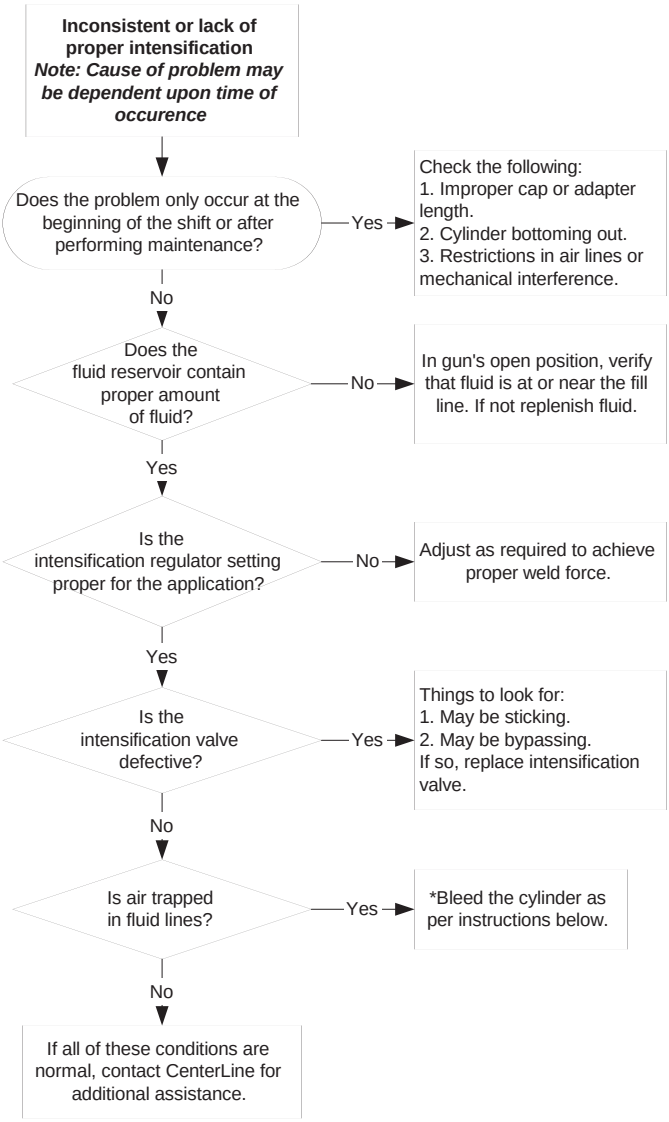

*If air is trapped in the fluid line, cycling the cylinder a few times should bleed all of the air out of the system. (To achieve the best results, the cylinder should be cycled in a vertical position with the working piston rod travelling downward otherwise the use of the bleeder screw is recommended). **Note: not all OHMA cylinders have bleeders.**

6.5 Fluid Exhaust from Air Valve Exhaust

FIGURE 22

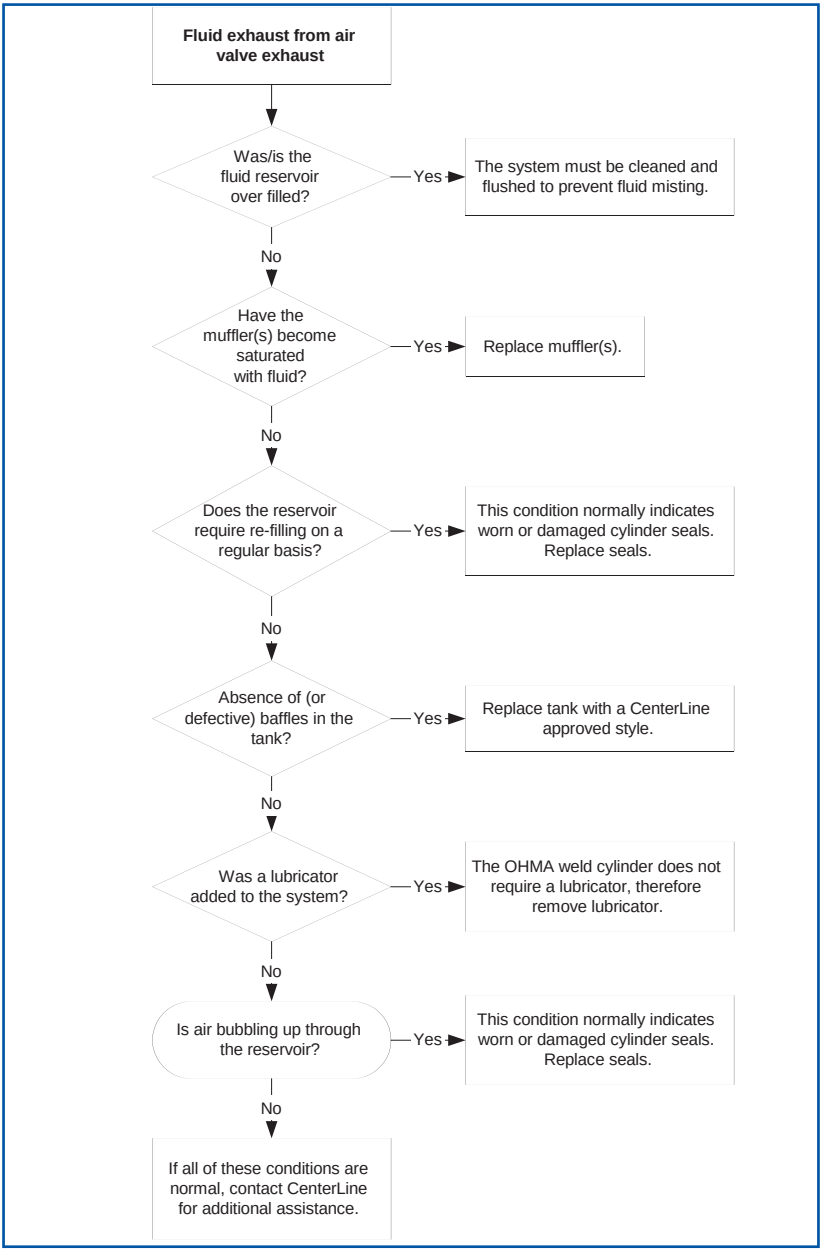

6.6 Cylinder Leak Test

Review "5.3 OHMA Cylinder Sequence of Operation"

1. First, remove all three lines to the cylinder and drain the fluid contained inside.
2. Put low-pressured air into the return port. This should retract both pistons. Check the two open ports, there should be no air leaks.
3. Remove the air connection from the return port and attach it to the middle port (fluid port). Air should cause the working piston rod to extend rapidly. Check the two open ports, there should be no air leaks.
4. Remove the air connection from the fluid port and attach it to the intensification port. Air should cause the intensifier piston to rapidly move forward. Metal to metal contact, sound will be heard when it bottoms out. Check the two open ports, there should be no air leaks.
5. If an air leak is found, the seals should be replaced and the cylinder checked again before installing it.

If no leaks can be located, the cylinder should be functioning properly when placed in operation. Other factors in the circuit, such as improper hook-up, tooling misalignment and valve breakdown, may cause cylinder malfunction.

6.7 Cylinder Disassembly Instructions

All disassembly and assembly must be done in a clean work area. Never clamp the cylinder barrel in a vise; always clamp the cylinder by the mounting block. Never use air pressure to remove internal parts. Care must be taken not to nip or pinch O-rings when re-assembling cylinders.

1. Drain all fluid from the cylinder. Remove the three set screws that secure the nose guide/mounting block (on the rod end) to the barrel.
2. Pull the working piston out of the cylinder. The nose guide/mounting block will slide out with the piston. Care should be taken when removing the piston so the barrel wall will not be scored.
3. Remove the three set screws that secure the middle separator. There is a threaded hole in the intensifier piston that will accept 1/4-20 NC threaded rod. This can be utilized to reach inside the barrel, screw into the intensifier & pull both the middle separator and the intensifier piston out.

Note: Do not throw away screws when disassembling, they are specially made (ground) for the cylinder.

6.8 Cylinder Reassembly Instructions

1. Clean all cylinder parts including the inside of the barrel with a solvent. If the barrel is scored, return it to CenterLine for repair/replacement.
2. Replace all seals. Extreme care should be used when replacing the high pressure seal located on the side of the middle separator stamped with a "P". The lips on the seal must face outward toward the working piston - **NOT** toward the intensifier piston.
3. Put the intensifier piston into the middle separator by inserting the piston rod into the side NOT stamped with a "P". Line up the screw holes and the fluid port on the middle separator with the screw holes in the barrel. Carefully push the middle separator and intensifier piston into place. Remember, the separator has a high pressure seal (the side stamped with the "P"), this should face toward the working piston. Install the middle separator screws.

4. Put the working piston in place in the nose guide. Line up the holes in the nose guide with the holes in the barrel. Push the nose guide and working piston into place and secure the screws. Check the cylinder for leaks in accordance with the instructions in "6.6 Cylinder Leak Test".

NOTE: If seal replacement does not eliminate cylinder malfunction, return all components to CenterLine for additional repairs.

6.9 Bleeding the OHMA Cylinder with Bleeder Screw

1. Purge all air lines to clean the system of any build up. Connect air lines to the cylinder .
2. Attach all the hosing to the cylinder making sure that the cylinder is below or lower than the fluid reservoir, have the cylinder in a horizontal position with the fittings facing upward.
3. Loosen bleeder screw and allow fluid to gravity feed through the cylinder, until the fluid has no trace of air or bubbles.

*Caution do not activate cylinder while the bleeder screw is loose. This action could cause serious injury.

Then tighten the bleeder screw.

4. Fill fluid reservoir to the maximum setting, loosen bleeder screw allowing fluid to escape until you have fluid without any air bubbles, then re tighten bleeder screw.
5. Replace any lost fluid in the reservoir to the maximum limit only.
6. Advance and return cylinder several times.
7. If you see any bubbles in the reservoir repeat step 3.
8. Without removing the advance line (Fluid line), install the cylinder and perform a tip force check.

*Do not allow the fluid reservoir to drop below the limit lines.

6.10 Common Plumbing Mistakes

1. Use of multiple "T"'s instead of manifolds

T's will restrict the flow since each T divides the flow rate by more than half. If the T's are located at the reservoir, the effects of a reduced flow rate will be magnified.

2. Use of undersized lines

The use of undersized lines will slow cylinder operation. The line ID should be one size greater than the port IDs in order for the gun to function at it's maximum speed capabilities.

3. Supply lines from the tank to the transgun are too long or routed improperly

Lines which are excessively long will restrict gun speed, therefore, always route the lines in the most direct path that is practical. This is especially true for fluid lines where loops may trap air. See "2.6 Mounting the Reservoir".

4. Use of lubricator in the system

The OHMA cylinder and Centerline reservoir packages are self lubricating. Adding a lubricator will introduce excess fluid to the system and this surplus will be expelled from the system in the form of a fluid mist in the exhaust or, in extreme cases, seep past the cylinder working piston seal to collect on the working piston and contaminate the gun. If a lubricator is needed for other equipment on the machine this should be incorporated after the air line which feeds the reservoir package.

5. Improper positioning of OHMA cylinder ports

The OHMA cylinder can be easily adjusted to orient the ports. Routing the lines underneath the cylinder will result in a natural air trap which could eventually cause the cylinder to become contaminated with air and thus not be able to fully generate the weld pressure required for the application. Contact OHMA for instructions on changing port orientation. See Figure 5.

6. Incorporating flow controls as a means to cushion cylinder operation

Flow controls are often used with welding equipment to alleviate impact forces which are normally developed by air cylinders. The OHMA cylinders are manufactured with much smaller bore sizes than their air cylinder counterparts. Since the cylinder functions with fluid, gun closure is realized with minimal impact force, therefore, there is no practical need for flow controls on the system; in fact, flow controls will tend to slow cylinder operation and will affect the almost instantaneous generation of tip force. The use of flow controls may prevent the OHMA cylinder pistons from returning properly.

7. Reusing fluid

When using the OHMA reservoir be sure not to use any old fluid or re-use drained fluid. Contaminants will enter the system damaging the OHMA cylinder seals.

6.11 Maintenance Considerations

Service to the electrical portion of the system must be performed by a qualified electrician.

SECONDARY CIRCUIT

The transgun secondary circuit is required to conduct very large current values. Shunt maintenance, although infrequent, must be considered. Loose shunts will cause severe contact surface damage. Periodic inspection of all connections is recommended. Check to make sure ground straps are securely in place, check the gun throat area for slag build up and make sure that the throat shield is still intact.

CABLES

All electrical cables should be periodically inspected for wear and breakdown. The power cables especially should be inspected because of the potential hazard of exposed power cable conductors. Turn off the power (electricity) when performing the cable check. A certified electrician should look over connections and hosing.

CYLINDERS

The OHMA cylinder should be examined periodically (using a tip force gauge) to ensure that it is developing the proper weld force. One method of quickly checking the system is to examine the reservoir. The fluid level should be within allowable limits, the fluid itself should be clean and should not contain air bubbles. If the fluid contains contaminants, it should be drained from the system and replaced with a fresh supply. If the reservoir shows air bubbles during the OHMA cylinder's return stroke, the cylinder should be removed from operation for further inspection and possible seal replacement.

TRANSGUN

A routine examination of the transgun assembly should be performed on a regular basis to verify that all connections are tight and that alignment of castings, cylinder, shunts and tips have been

maintained. The gun should be free of weld flash, oil, grease, or any other deposit which may affect the gun's ability to function properly.

6.12 Preventive Maintenance Schedule

*Item to inspect - **X** or Service - **XX***	Per Shift	Daily	Weekly	Monthly	Every 500,000 Cycles	Every 1.5 M Cycles	Every 2.5 M Cycles	Every 3 M Cycles	Every 5 M Cycles	As Req'd
Cylinder Checks										
OHMA Weld Cylinder Z0					X	XX				
OHMA Weld Cylinder Z1					X			XX		
OHMA Fluid Levels			X							XX
Verify Tightness of Bolts				X						
Equalizing Cylinder					X					XX
Tip Positioning Cylinder					X					XX
Transgun Components										
Cold Form Adapters			X							XX
Pivot Pins					X				XX	
All Pivot Bushings					X				XX	
Throat Guards			X							XX
Laminated Shunts					X					XX
Welding Transformer							X			XX
Water Cooling	X									XX
Welding Electrodes	X									XX
Equalizing Slides					X					XX
Castings							X			XX
Stop Links					X					XX
Stop Pin					X		XX			
Mounting Brackets						X				XX
Common										
Verify Tightness of Bolts										XX

6.13 Recommended Inspections and Services

	RECOMMENDED INSPECTIONS	RECOMMENDED SERVICE
OHMA WELD CYLINDER	•excessive fluid seepage •scored working rod •worn nose bushing •worn pivot mounts	•replace all cylinder seals •replace working rod if damaged •replace nose bushing if worn •replace pivot mounts if worn
COLD FORM ADAPTERS	•worn or damaged cap tapers •damaged water tubes •cracks •dirty cap tapers	•replace adapter if worn or damaged •repair/replace damaged water tubes •replace immediately if cracked •clean cap tapers weekly
PIVOT PINS	•worn pivot pin	•replace pin
PIVOT BUSHINGS	•worn pivot bushings	•replace bushings
THROAT GUARDS	•mountings are secure •no holes through material •excessive weld slag causing shorting	•secure mountings •replace worn or damaged material •remove excessive slag
LAMINATED SHUNTS	•shunts and adapters are secure •check for broken laminations	•secure shunts and adapters •replace shunt if broken
OHMA FLUID LEVELS	•ensure proper fluid levels •check for damaged fluid line or cylinder if losses are excessive	•replenish to fill line with weld cylinder fully retracted or gun full open •repair and replenish as required
WELDING TRANSFORMER	•ensure primary and secondary connections are secure •check tip to tip current with new caps compare with initial setup data	•secure connections as required •repair as required
WATER COOLING	•check flow meters if installed •look for overheating gun components •check for damaged water tubes	•isolate problem and repair as required
WELDING ELECTRODES	•uneven wear •mushrooming	•verify tip to material alignment •ensure proper cooling and tip change intervals

	RECOMMENDED INSPECTIONS	RECOMMENDED SERVICE
EQUALIZING SLIDES	•ensure adequate movement •worn wipers •worn slides •foreign material build up •secured properly	•replace cam followers as required •replace wipers as required •replace slides as required •clean as application dictates •secure
CASTINGS	•check for cracks/leaks •unusual wear	•replace as required
STOP LINKS	•properly secured •worn or damaged insulated pin sleeve •correct gun bias adjustment	•secure •replace pin sleeve •adjust and secure to spec as required
EQUALIZING AND/OR TIP POSITION CYLINDER	•blow by •scored working rod •excessive bushing wear	•replace cylinder as required

NOTES:

NOTES:

T. J. SNOW CO., INC.
1-800-NOW-SNOW
http://www.tjsnow.com

centerline®
(WINDSOR) LIMITED

Automation Components Division
655 Morton Dr.
Windsor, Ont. N9J 3T9
Canada

website: www.cntrline.com
Tel. 519-734-8330, Toll free 800-268-8330
Fax 519-734-2006
email: info@cntrline.com

VT-IG-P-2.5-0306
Printed in Canada