TECNA®

SPOT WELDING GUNS
MEDIUM & HEAVY DUTY
16-75 kVA

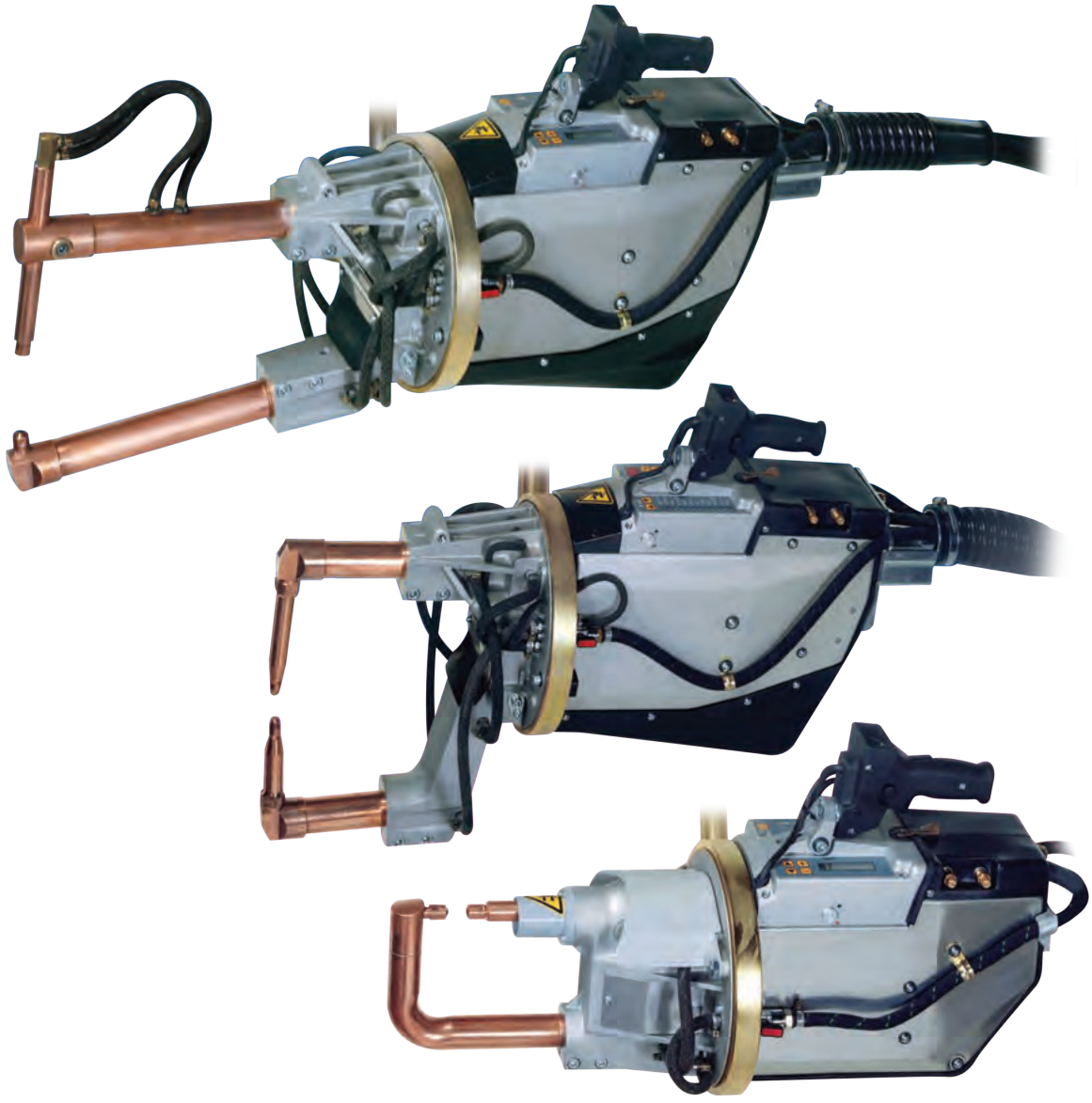

CE

T. J. SNOW

RWMA® MEMBER

SUSPENDED SPOT WELDING GUNS

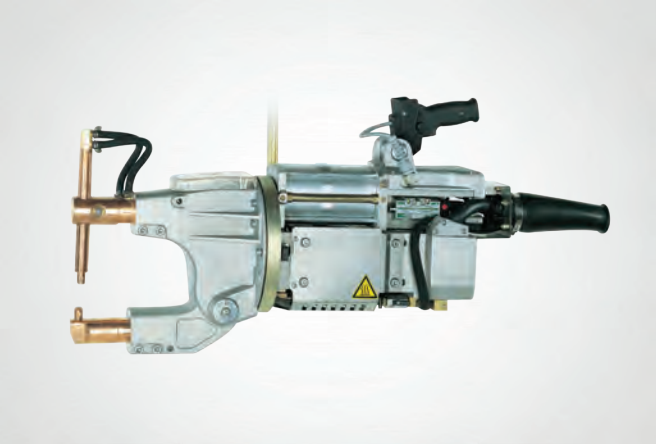

T. J. Snow stocks a variety of inventory and offers support services of all TECNA portable and stationary resistance spot welding machinery.

TECNA's top of the line, self-contained suspended production spot welding guns with integrated transformers and microprocessor-based solid-state digital weld controls are available in C and Scissor style configurations.

Accessories, such as spring balancers and bridge rail systems are also available for installation.

Medium and Heavy Duty spot welding guns range from 16 to 75 KVA. Heavy Duty suspended guns have a higher capacity and are available with an integrated or external digital control. With a variety of arm and set-up configurations, units can be built to meet the customer's exact requirement.

TECNA portable spot welding guns are economical and ideal for high production environments. The portable spot welding guns provide consistent, quality welds which can be attributed to a robust design with reliable features.

FEATURES:

- Integrated microprocessor-based solid-state digital control
- Built-in transformer meets ISO 5826 standards
- Gyro suspension allows 360 degree maneuverability
- Rotation lock feature allows securing gun in multiple positions
- Adjustable weld stroke
- Long weld stroke enables welding in difficult-to-reach areas
- Retraction stroke allows reaching into tough spots
- Trigger handle controls include 2 welding programs, retraction valve operation and 'weld', 'no weld' function
- Water-cooled copper secondary circuit
- Safety features prevent accidental initiation
- 21' length power cable, air and water hoses included
- Lube-free pneumatic circuit eliminates oil mist from the shop
- Oil-less chrome-plated cylinder and shaft extends life cycle

OPTIONAL EQUIPMENT

Arms and electrodes (in addition to those listed in this brochure, many special configurations are available to satisfy various requirements).

Mounts

Twin-handle mount – one trigger handle, one grip handle – mounts control handle to one side of spot gun, and additional grip handle on other side.

Twin-trigger mount – – mount two control handles, one on each side of spot gun. Available with either 2- or 4-position schedule selectors. Requires TE470 control.

Underside mount – mounts control handle on underside of spot gun.

Supply Cable

Various lengths of supply cables/ hoses are available at customer's request. The standard length supplied is 21'.

Available long-life shielded supply cable.

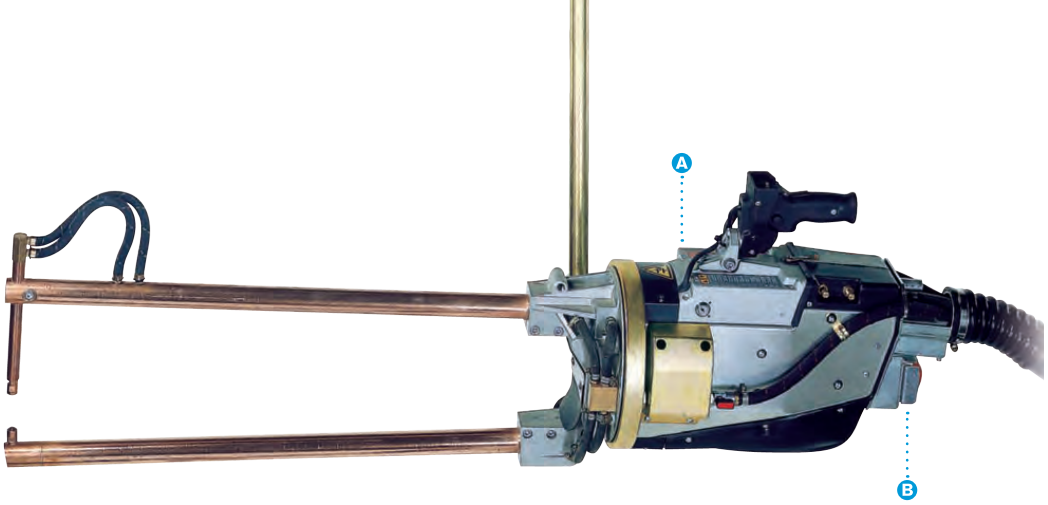

STANDARD EQUIPMENT:

- Suspended Spot Gun with choice of built-in control unit (TE300, TE450 or TE470)
- Integrated earth leakage detection and circuit breaker/GFCI.
- Must specify voltage and frequency of welder at time of order.
- Integrated Filter-Regulator Unit with gauge.
- Includes 21' of supply cable and hoses.
- Emergency stop causes operation to cease immediately.

A CONTROL UNIT TE 300
(Standard Control)

- 2 welding programs with direct recall by toggle switch on trigger handle.
- Pre-weld, slope and impulse functions.
- Single and auto-repeat modes.
- Programming lockout switch with removable key (option 3111).

B Emergency Stop Button

- Immediately stops welder operation.

CONTROL UNITS TE 300 & TE 450/470

Available Parameters	TE 300	TE 450/470
Squeeze 1	00 - 99 ~	00 - 99 ~
Squeeze	01 - 99 ~	01 - 99 ~
Pre-weld	00 - 60 ~	00.0 - 99.0 ~
Pre-power	01 - 99%	05 - 99%
Cold 1	00 - 50 ~	00 - 50 ~
Slope up	00 - 29 ~	00 - 25 ~
Weld 1	01 - 60 ~	00.5 - 99.5 ~
Power 1	01 - 99%	05 - 99% 1.0 - 36.0 kA
# of Impulses	01 - 09	01 - 09
Cold 2	–	00 - 50 ~

Available Parameters	TE 300	TE 450/470
Slope down	–	00 - 25 ~
Cold 3	–	00 - 50 ~
Post-weld	–	00.0 - 99.0 ~
Post-power	–	05 - 99%
Hold time	01 - 99 ~	01 - 99 ~
Off time	00 - 98/99 ~	00 - 99 ~
Current min	–	1.0 - 36.00 kA
Angle min	–	005 - 180°
Current max	–	1.0 - 36.0 kA
Angle max	–	005 - 180°
Pressure	–	0.5 - 10.0 bar

All times are given in cycles.

OPTIONAL EQUIPMENT

Water Flow Switch
Prevents welding when water is not circulating through the welder.

Part # 3105 (L - LL)
Part # 3106 (C)
Part # 3107 (LG - LLG)
Part # 3108 (C)

Program Lockout Switch
Removable key selector for lockout of programming schedule.

Part # 3111 (TE 300)

Balancers
Equipped with Rotating Hook (Option R) and two-position lock-unlock switch, operable from the ground (Option B).

For capacity, see the specifications table.

Control Unit TE 450/470

- Constant Current Mode.
- 63 welding programs, 2 with direct recall by toggle switch on trigger handle.
- Display of welding current (KA) and conduction angle.
- Weld Current or Conduction Angle Limits.
- Stepper Function with programmable curve.
- Automatic retraction stroke function.
- Slope, impulse, pre- and post-weld functions.
- Adjustment of time in half-cycles.
- Weld counter.

Additional Options

- TE450 control allows direct selection between 2 programs
- TE470 control allows direct selection between 4 programs
- TE470 has option for two handles, each of which can select between 2 programs (4 total)

SPECIFICATIONS		3321	3322	3323	3324	3327	3328
Gun type		Scissor	Scissor	C	Scissor	Scissor	Scissor
Rated @ 50% duty cycle	**kVA**	**16**	**23**	**23**	**23**	**38**	**38**
Max power	kVA	37	65	63	52	110	92
Short circuit current	kA	16.000	21.000	21.000	16.500	27.000	22.500
Thermal current at 100%	kA	4.000	4.250	4.250	4.250	5.400	5.400
Secondary voltage	V	2.8	3.8	3.8	3.8	5	5
Supply voltage 60 Hz	V	220 v or 440 v (gun is single voltage and must be specified at order time)					
Cable section up to 30 m	mm^2	10	16	16	16	25	25
Service @ 220/440 vac	A	64/32	80/40	80/40	80/40	160/80	160/80
Arms spacing	in (mm)	6.5 (165)	6.5 (165)	4.7 (120)	8.9 (225)	6.1 (155)	11.0 (280)
Arms min. length	in (mm)	7.5 (190)	7.5 (190)	–	9.8 (250)	9.8 (250)	9.8 (250)
Max electrode force (8 bar)	lbs (daN)	629 (286)	744 (338)	660 (300)	590 (268)	1529 (695)	1529 (695)
Working stroke	in (mm)	0.2-1.0 (6-25)	0.2-0.8 (5-20)	0.2-0.8 (5-20)	0.2-1.0 (6-25)	0.4-1.0 (10-26)	0.4-1.0 (10-26)
Max stroke	in (mm)	1.2-1.9 (30-48)	1.1-1.6 (28-40)	1.4-2.0 (35-50)	1.4-2.0 (35-50)	1.8-2.4 (45-60)	1.8-2.4 (45-60)
Arms max length	in (mm)	25.6 (650)	31.5 (800)	–	25.6 (650)	40.6 (1030)	32.3 (820)
Max electrode force (8 bar)	lbs (daN)	209 (95)	205 (93)	–	249 (113)	343 (156)	431 (196)
Working stroke	in (mm)	0.7-2.8 (18-72)	0.7-2.9 (18-73)	–	0.6-2.4 (15-60)	1.6-3.9 (40-100)	1.2-3.0 (30-75)
Max stroke	in (mm)	3.5-5.5 (90-140)	4.0-5.7 (102-146)	–	3.3-4.7 (84-120)	6.5-8.9 (165-225)	5.1-6.9 (130-175)
Compressed air supply	psi (bar)	94 (6.5)	94 (6.5)	94 (6.5)	94 (6.5)	94 (6.5)	94 (6.5)
Air per 1000 spots at kP (5 bar)	Nm^3	4	4	4	4	7.5	7.5
Hose inside Ø	in (mm)	0.4 (10)	0.4 (10)	0.4 (10)	0.4 (10)	0.4 (10)	0.4 (10)
Water cooling at 250 kP (2.5 bar)	gpm (lpm)	1.87 (7)	1.85 (7)	1.85 (7)	1.85 (7)	2.11(8)	2.11(8)
Max thickness mild steel sheet with arms min length, 90° arms	in (mm)	0.1 + 0.1 (3 + 3)	0.2 + 0.2 (4 + 4)	0.2 + 0.2 (4 + 4)	0.1 + 0.1 (3.5 + 3.5)	0.2 + 0.2 (5 + 5)	0.2 + 0.2 (5 + 5)
with arms L = 20 in (508 mm), 90° arms	in (mm)	0.07 + 0.07 (1.8 + 1.8)	0.1 + 0.1 (3 + 3)	–	0.1 + 0.1 (3 + 3)	0.1 + 0.1 (3.5 + 3.5)	0.1 + 0.1 (3.5 + 3.5)
with arms max length, 90° arms	in (mm)	0.05 + 0.05 (1.2 + 1.2)	0.08 + 0.08 (2 + 2)	–	0.08 + 0.08 (2 + 2)	0.08 + 0.08 (2 + 2)	0.1 + 0.1 (2.5 + 2.5)
cross wire max Ø, 90° arms	in (mm)	0.4 + 0.4 (10 + 10)	0.6 + 0.6 (14 + 14)	0.6 + 0.6 (14 + 14)	0.5 + 0.5 (12 + 12)	0.6 + 0.6 (16 + 16)	0.6 + 0.6 (16 + 16)
Welding rate per minute 0.04 + 0.04 in (1 + 1 mm) class A		66	80	80	80	100	100
0.06 + 0.06 in (1.5 + 1.5 mm) class A		–	32	32	32	44	44
0.08 + 0.08 in (2 + 2 mm) class A		14	16	16	16	20	20
0.1 + 0.1 in (2.5 + 2.5 mm) class A		–	–	–	–	14	14
0.1 + 0.1 in (3 + 3 mm) class B		–	–	–	–	8	8
Net weight (with cables, hoses, suspension and shortest arms)	lbs (kg)	101 (46)	114 (52)	117 (53)	121 (55)	167 (76)	172 (78)
Packing box dimensions	in (mm)	12 x 33.5 x 21.7 (300 x 850 x 550)	12 x 33.5 x 21.7 (300 x 850 x 550)	13 x 44.1 x 24.8 (330 x 1120 x 630)	13 x 44.1 x 24.8 (330 x 1120 x 630)	29.9 x 41 x 19.7 (760 x 1050 x 500)	29.9 x 41 x 19.7 (760 x 1050 x 500)
Spring balancer short arms capacity required	lbs (kg)	110-121 (50-55)	121-132 (55-60)	121-132 (55-60)	132-143 (60-65)	176-198 (80-90)	176-198 (80-90)
short arms balancer require	part #	9367BR	9368BR	9368BR	9368BR	9370BR	9370BR
long arms capacity required	lbs (kg)	121-132 (55-60)	143-154 (65-70)	–	143-154 (65-70)	209-231 (95-105)	209-231 (95-105)
long arms balancer required	part #	9368BR	9368BR	–	9369BR	9371BR	9371BR
Standard control	part #	TE300	TE300	TE300	TE300	TE450	TE450

Specifications subject to change without notice.

3321

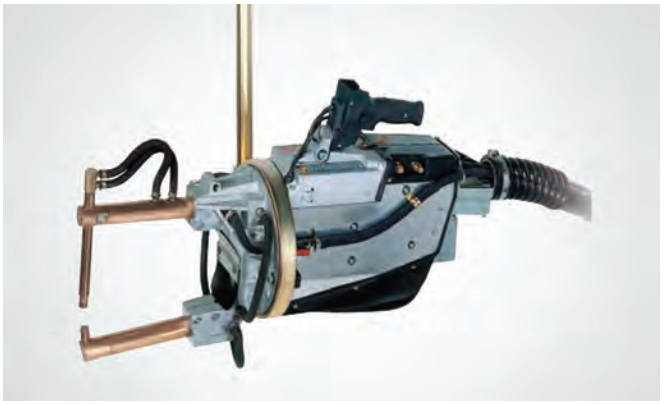

Scissor-style / 16 kVA / TE300 Integrated Control

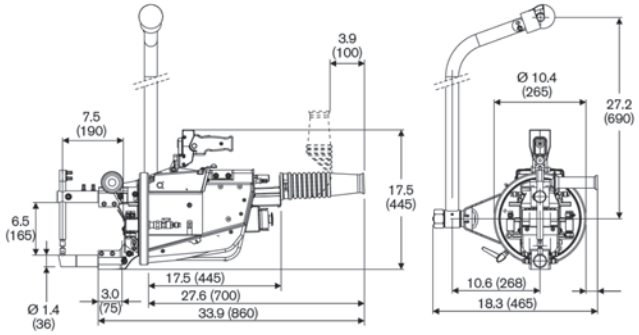

3322

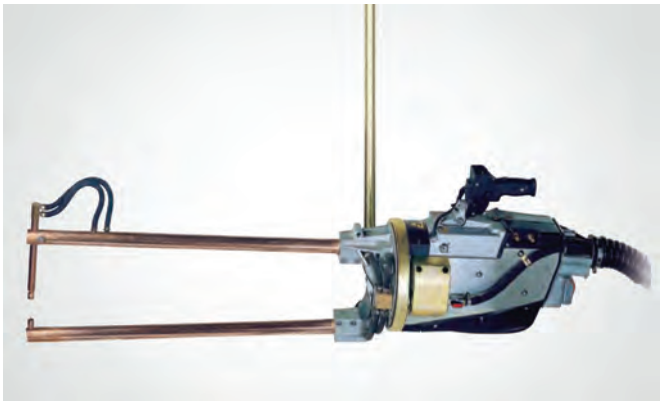

Scissor-style / 23 kVA / TE300 Integrated Control

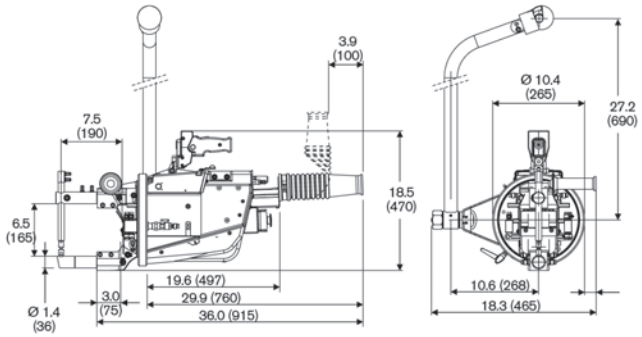

ARMS FOR 3321, 3322

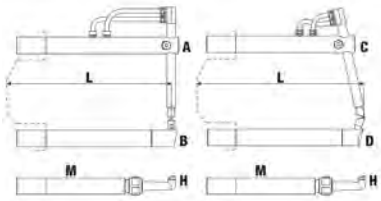

L	in (mm)	7.5 (190)	9.8 (250)	13.8 (350)	20 (508)	25.6 (650)	31.5 (800)
A	Part #	**4850**	**4854**	**4858**	**4862**	**4866**	**4870**
B	Part #	**4852**	**4856**	**4860**	**4864**	**4868**	**4872**
C	Part #	**4851**	**4855**	**4859**	**4863**	**4867**	**4871**
D	Part #	**4853**	**4857**	**4861**	**4865**	**4869**	**4873**

CUSTOM ARM CONFIGURATIONS AVAILABLE - EXAMPLES INCLUDE:

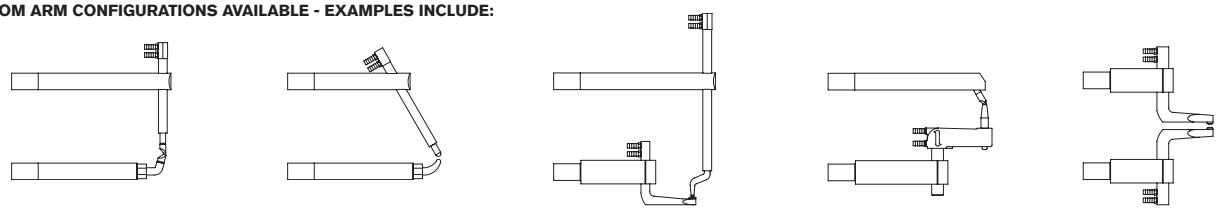

ARMS FEATURES WITH 3321

L	F*	Set weight (approx.)	Short stroke		Long Stroke	
in (mm)	lbs (daN)	lbs (kg)	min in (mm)	max in (mm)	min in (mm)	max in (mm)
7.5 (190)	629 (286)	7.3 (3.3)	0.2 (6)	1.0 (25)	1.2 (30)	1.9 (48)
9.8 (250)	499 (227)	9.5 (4.3)	0.3 (7)	1.2 (30)	1.5 (38)	2.4 (60)
13.8 (350)	397 (168)	12.8 (5.8)	0.4 (10)	1.6 (41)	2.0 (50)	3.1 (80)
20 (508)	264 (120)	18.7 (8.5)	0.5 (13)	2.2 (56)	2.8 (70)	4.4 (112)
25.6 (650)	209 (95)	23.3 (10.6)	0.7 (18)	2.8 (72)	3.5 (90)	5.5 (140)

* Electrode force at 87 psi (6 bar)

ARMS FEATURES WITH 3322

L	F*	Set weight (approx.)	Short stroke		Long Stroke	
in (mm)	lbs (daN)	lbs (kg)	min in (mm)	max in (mm)	min in (mm)	max in (mm)
7.5 (190)	744 (338)	7.3 (3.3)	0.2 (5)	0.8 (20)	1.1 (28)	1.6 (40)
9.8 (250)	590 (268)	9.5 (4.3)	0.2 (6)	1.0 (25)	1.4 (35)	2.0 (50)
13.8 (350)	438 (199)	12.8 (5.8)	0.3 (8)	1.3 (34)	1.9 (47)	2.8 (70)
20 (508)	264 (120)	18.7 (8.5)	0.5 (13)	2.2 (56)	2.8 (70)	4.4 (112)
25.6 (650)	249 (113)	23.3 (10.6)	0.6 (15)	2.4 (60)	3.3 (84)	4.7 (120)
31.5 (800)	205 (93)	28.6 (13)	0.7 (18)	2.9 (73)	4.0 (102)	5.7 (146)

* Electrode force at 87 psi (6 bar)

3323

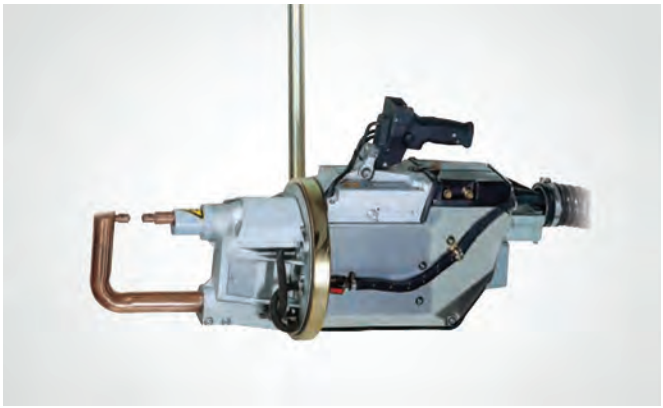

Scissor-style / 23 kVA / TE300 Integrated Control

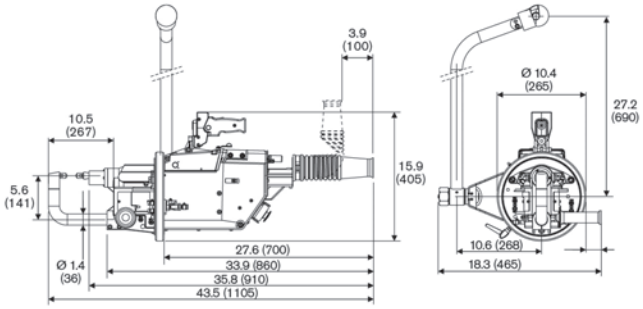

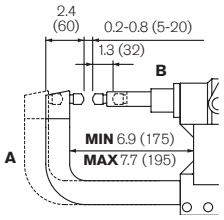

A 4883 **B** 4882

CUSTOM ARM CONFIGURATIONS AVAILABLE
EXAMPLES INCLUDE:

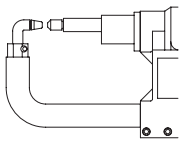

ARMS FEATURES WITH 3323

L	F*	Set weight (approx.)	Short stroke		Long Stroke	
part #	lbs (daN)	lbs (kg)	min in (mm)	max in (mm)	min in (mm)	max in (mm)
4882 4883	660 (300)	7.1 (3.2)	0.2 (5)	0.8 (20)	1.4 (35)	2.0 (50)

* Electrode force at 87 psi (6 bar)

3324

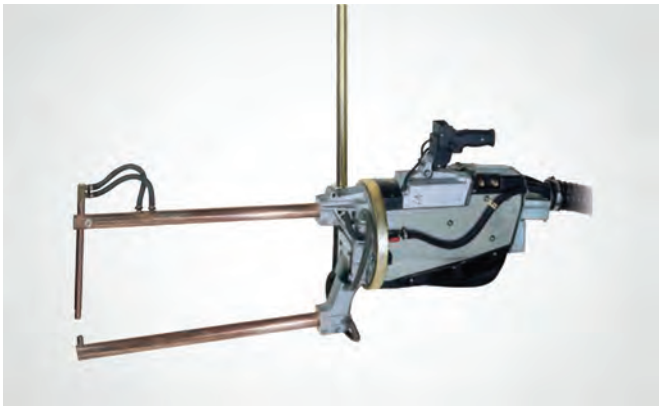

Scissor-style / 23 kVA / TE300 Integrated Control

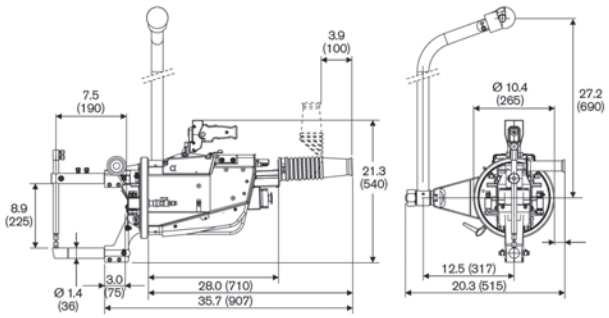

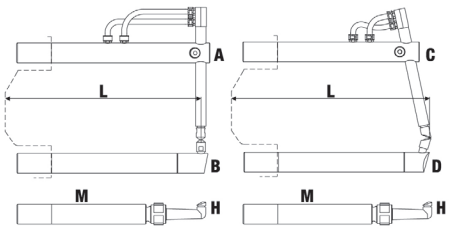

L	in (mm)	9.8 (250)	13.8 (350)	20 (508)	25.6 (650)
E	Part #	**4874**	**4876**	**4878**	**4880**
B	Part #	**4856**	**4860**	**4864**	**4868**
F	Part #	**4875**	**4877**	**4879**	**4881**
D	Part #	**4857**	**4861**	**4865**	**4869**

ARMS FEATURES WITH 3324

L	F*	Set weight (approx.)	Short stroke		Long Stroke	
in (mm)	lbs (daN)	lbs (kg)	min in (mm)	max in (mm)	min in (mm)	max in (mm)
9.8 (250)	590 (268)	9.9 (4.5)	0.2 (6)	1.0 (25)	1.4 (35)	2.0 (50)
13.8 (350)	438 (199)	13.2 (6)	0.3 (8)	1.3 (34)	1.9 (47)	2.8 (70)
20 (508)	308 (140)	19.2 (8.7)	0.5 (12)	1.9 (48)	2.6 (65)	3.8 (97)
25.6 (650)	249 (113)	23.8 (10.8)	0.6 (15)	2.4 (60)	3.3 (84)	4.7 (120)

* Electrode force at 87 psi (6 bar)

3327

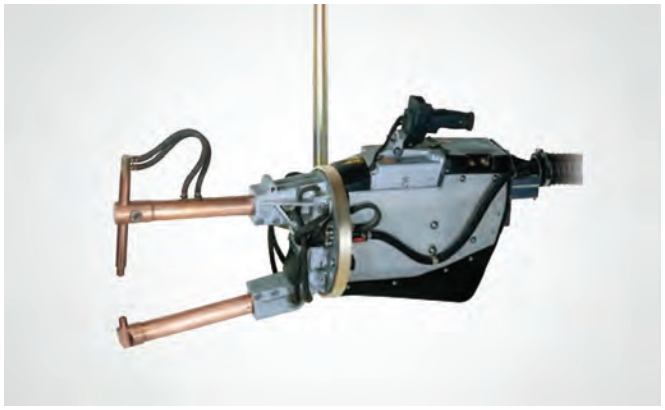

Scissor-style / 38 kVA / TE450 Integrated Control

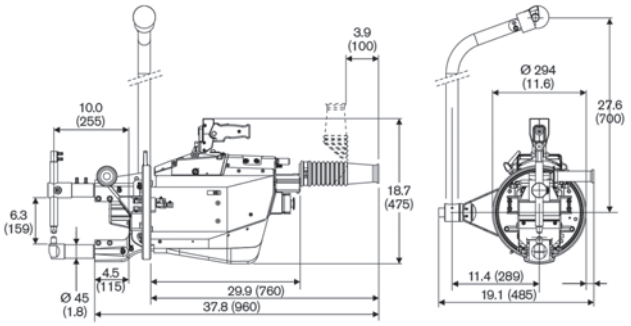

3328

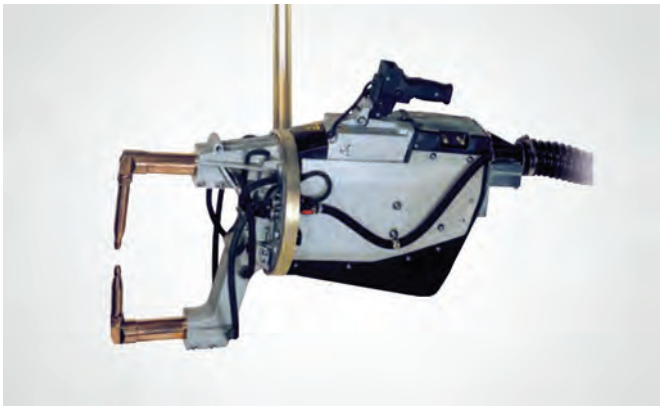

Scissor-style / 38 kVA / TE450 Integrated Control

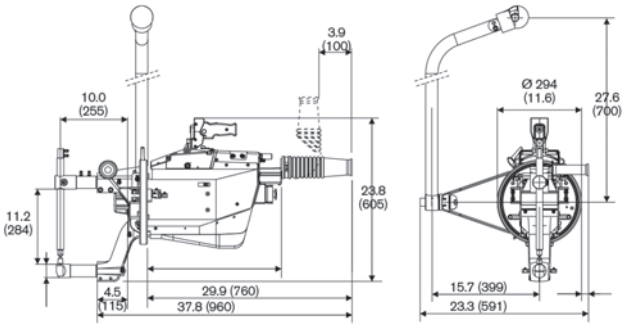

ARMS FOR 3327, 3328

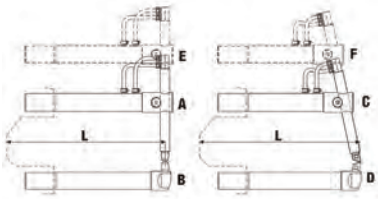

Custom arm configurations available

L	in (mm)	10.0 (255)	16.1 (408)	24.0 (610)	32.3 (820)	40.6 (1030)
A	Part #	4750	4756	4762	4768	4774
B	Part #	4752	4758	4764	4770	4776
C	Part #	4751	4757	4763	4769	4775
D	Part #	4753	4759	4765	4771	4777
E	Part #	4754	4760	4766	4772	–
F	Part #	–	4761	4767	4773	–

ARMS FEATURES WITH 3327

L	F*	Set weight (approx.)	Short stroke		Long Stroke	
in (mm)	lbs (daN)	lbs (kg)	min in (mm)	max in (mm)	min in (mm)	max in (mm)
10.0 (255)	1529 (695)	14.3 (6.5)	0.4 (10)	1.0 (26)	1.8 (45)	2.4 (60)
16.1 (408)	849 (386)	20.9 (9.5)	0.5 (12)	1.4 (35)	2.6 (65)	3.0 (75)
24.0 (610)	581 (264)	29.7 (13.5)	0.9 (22)	2.4 (60)	3.9 (100)	5.4 (136)
32.3 (820)	431 (196)	39.6 (18)	1.2 (30)	3.0 (75)	5.1 (130)	6.9 (175)
40.6 (1030)	343 (156)	48.4 (22)	1.6 (40)	3.9 (100)	6.5 (165)	8.9 (225)

* Electrode force at 87 psi (6 bar)

ARMS FEATURES WITH 3328

L	F*	Set weight (approx.)	Short stroke		Long Stroke	
in (mm)	lbs (daN)	lbs (kg)	min in (mm)	max in (mm)	min in (mm)	max in (mm)
10.0 (255)	1529 (695)	15.4 (7)	0.4 (10)	1.0 (26)	1.8 (45)	2.4 (60)
16.1 (408)	849 (386)	22.0 (10)	0.5 (12)	1.4 (35)	2.6 (65)	3.0 (75)
24.0 (610)	581 (264)	30.8 (14)	0.9 (22)	2.4 (60)	3.9 (100)	5.4 (136)
32.3 (820)	431 (196)	39.6 (18)	1.2 (30)	3.0 (75)	5.1 (130)	6.9 (175)

* Electrode force at 87 psi (6 bar)

SPECIFICATIONS		3020	3024	3032	3040
Gun type		C-gun	C-gun	C-gun	C-gun
Rated @ 50% duty cycle	**kVA**	**32**	**36**	**53**	**60**
Max power	kVA	90	115	150	192
Short circuit current	kA	20	22.8	26.5	30
Thermal current at 100%	kA	4	4	5.3	5.3
Secondary voltage	V	5.6	6.3	7.1	8
Supply voltage 60 Hz*	V	220 v or 440 v (gun is single voltage and must be specified at order time)			
Cable section up to 30 m	mm^2	16	16	25	25
Service @ 220/440 vac**	Amps	126 / 63	126 / 63	200/100	250/125
Arms centerline distance	in (mm)	5.5 (140)	5.5 (140)	5.8 (148)	5.8 (148)
Insulated arms connection Ø	in (mm)	1.7 (42)	1.7 (42)	1.9 (47)	1.9 (47)
Non insulated arms connection Ø	in (mm)	1.7 (44)	1.7 (44)	1.9 (49)	1.9 (49)
Ø gyro suspension	in (mm)	9.6 (244)	9.6 (244)	11.6 (294)	11.6 (294)
Arms min. length	in (mm)				
Max electrode force (8 bar)	lbs (daN)	1100 (500)	1100 (500)	1364 (620)	1364 (620)
Working stroke	in (mm)	0.2-1.2 (5-30)	0.2-1.2 (5-30)	0.2-1.2 (5-30)	0.2-1.2 (5-30)
Max stroke	in (mm)	3.0-3.9 (75-100)	3.0-3.9 (75-100)	3.0-3.9 (75-100)	3.0-3.9 (75-100)
Compressed air supply	psi (bar)	116 (8)	116 (8)	116 (8)	116 (8)
Air per 1000 spots short stroke long stroke	Nm^3/8 bar Nm^3/8 bar	4 12	4 12	5 15	5 15
Ø supply hose	in (mm)	0.4 (10)	0.4 (10)	0.4 (10)	0.4 (10)
Water cooling	gpm (lpm)	1.7 (6)	1.7 (6)	1.7 (6)	1.7 (6)
Max thickness mild steel sheet with standard arm length	in/class (mm)/class	0.1 + 0.1/B (3 + 3/B)	0.1 + 0.1/B (3 + 3/B)	0.2 + 0.2/B (4 + 4/B)	0.1 + 0.1/B (4 + 4/B)
cross wire max Ø	in (mm)	0.5 (14)	0.6 (16)	0.7 (18)	0.8 (20)
Welding rate per 1/Welding class					
0.04 + 0.04 in (1 + 1 mm)	N°/class	70/A	70/A	125/A	125/A
0.06 + 0.06 in (1.5 + 1.5 mm)	N°/class	30/A	30/A	50/A	50/A
0.08 + 0.08 in (2 + 2 mm)	N°/class	15/B	15/B	25/B	25/B
0.1 + 0.1 in (2.5 + 2.5 mm)	N°/class	10/B	10/B	17/B	17/B
0.1 + 0.1 in (3 + 3 mm)	N°/class	6/B	6/B	10/B	10/B
Net weight (with cables, hoses, suspension without arms)	lbs (kg)	112 (51)	117 (53)	157 (71)	165 (75)
Balancer: standard arms	part #	9412	9412	9413	9413
Standard Control	part #	TE470	TE470	TE470	TE470

* Other voltage/frequency combinations are available
** Use class K slow blow fuses or circuit breaker with instantaneous trip

ARMS FOR 3020, 3024, 3032, 3040

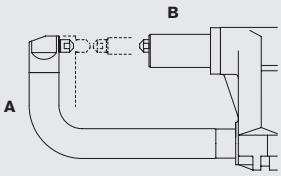

3020, 3024	
A 4401	**B** 4402
3032, 3040	
A 4410	**B** 4411

Custom arm configurations available

SPECIFICATIONS		3154	3160	3166	3156	3162	3168
Gun type		Scissor	Scissor	Scissor	Scissor	Scissor	Scissor
Rated @ 50% duty cycle	**kVA**	**53**	**60**	**75**	**53**	**60**	**75**
Maximum power	kVA	147	192	260	147	192	256
Short circuit current	kA	26	30	32.5	26	30	32
Thermal current at 100%	kA	5.3	5.3	5.3	5.3	5.3	5.3
Secondary voltage	V	7.1	8	10	7.1	8	10
Supply voltage 60 Hz	V	220v or 440 v (gun is single voltage and must be specified at order time)					
Cable section up to 30 m	mm²	25	25	35	25	25	35
Service @ 220/440 vac**	Amps	200/100	250/125	300/150	200/100	250/125	300/150
Arms spacing	in (mm)	8.6 (219)	8.6 (219)	8.6 (219)	12.3 (312)	12.3 (312)	12.3 (312)
Insulated arms connection Ø	in (mm)	1.9 (47)	1.9 (47)	1.9 (47)	1.9 (47)	1.9 (47)	1.9 (47)
Non insulated arms connection Ø	in (mm)	1.9 (49)	1.9 (49)	1.9 (49)	1.9 (49)	1.9 (49)	1.9 (49)
Ø gyro suspension	in (mm)	11.6 (294)	11.6 (294)	11.6 (294)	11.6 (294)	11.6 (294)	11.6 (294)
Arms min. length	in (mm)	10.0 (255)	10.0 (255)	10.0 (255)	10.0 (255)	10.0 (255)	10.0 (255)
Max electrode force (8 bar)	lbs (daN)	1881 (855)	1881 (855)	1881 (855)	1881 (855)	1881 (855)	1881 (855)
Working stroke	in (mm)	0.2-0.8 (5-20)	0.2-0.8 (5-20)	0.2-0.8 (5-20)	0.2-0.8 (5-20)	0.2-0.8 (5-20)	0.2-0.8 (5-20)
Max stroke	in (mm)	2.0-2.8 (5-70)	2.0-2.8 (5-70)	2.0-2.8 (5-70)	2.0-2.8 (5-70)	2.0-2.8 (5-70)	2.0-2.8 (5-70)
Arms max length	in (mm)	40.6 (1030)	40.6 (1030)	40.6 (1030)	40.6 (1030)	40.6 (1030)	40.6 (1030)
Max electrode force (8 bar)	lbs (daN)	539 (245)	539 (245)	539 (245)	539 (245)	539 (245)	539 (245)
Working stroke	in (mm)	0.2-2.4 (5-60)	0.2-2.4 (5-60)	0.2-2.4 (5-60)	0.2-2.4 (5-60)	0.2-2.4 (5-60)	0.2-2.4 (5-60)
Maximum stroke	in (mm)	7.1-9.8 (180-250)	7.1-9.8 (180-250)	7.1-9.8 (180-250)	7.1-9.8 (180-250)	7.1-9.8 (180-250)	7.1-9.8 (180-250)
Compressed air supply	psi (bar)	116 (8)	116 (8)	116 (8)	116 (8)	116 (8)	116 (8)
Air per 1000 spots short stroke long stroke	Nm³/8 bar Nm³/8 bar	5 11	5 11	5 11	5 11	5 11	5 11
Ø supply hose	in (mm)	0.5 (13)	0.5 (13)	0.5 (13)	0.5 (13)	0.5 (13)	0.5 (13)
Water cooling	gpm (lpm)	2.2(8)	2.2 (8)	2.2 (8)	2.2 (8)	2.2 (8)	2.2 (8)
Max thickness mild steel sheet with standard arm length, 90° arms	in/class (mm)/class	0.1 + 0.1/B (4 + 4/B)	0.2 + 0.2/B (4.5 + 4.5/B)	0.2 + 0.2/B (4.5 + 4.5/B)	0.2 + 0.2/B (4 + 4/B)	0.2 + 0.2/B (4.5 + 4.5/B)	0.2 + 0.2/B (4.5 + 4.5/B)
with arms L = 20 in (508 mm), 90° arms	in/class (mm)/class	0.1 + 0.1/B (2.8 + 2.8/B)	0.1 + 0.1/B (2.8 + 2.8/B)	0.1 + 0.1/B (2.8 + 2.8/B)	0.1 + 0.1/B (2.8 + 2.8/B)	0.1 + 0.1/B (2.8 + 2.8/B)	0.1 + 0.1/B (2.8 + 2.8/B)
with arms max length, 90° arms	in/class (mm)/class	0.1 + 0.1/C (3 + 3/C)	0.1 + 0.1/C (3 + 3/C)	0.1 + 0.1/C (3 + 3/C)	0.1 + 0.1/C (3 + 3/C)	0.1 + 0.1/C (3 + 3/C)	0.1 + 0.1/C (3 + 3/C)
cross wire max Ø, 90° arms	in (mm)	0.7 (18)	0.8 (20)	0.8 (20)	0.7 (18)	0.8 (20)	0.8 (20)
Welding rate per 1/Welding class 0.04 + 0.04 in (1 + 1 mm)	N°/class	125/A	125/A	125/A	125/A	125/A	125/A
0.06 + 0.06 in (1.5 + 1.5 mm)	N°/class	50/A	50/A	50/A	50/A	50/A	50/A
0.08 + 0.08 in (2 + 2 mm)	N°/class	25/A	25/A	25/A	25/A	25/A	25/A
0.1 + 0.1 in (2.5 + 2.5 mm)	N°/class	17/A	17/A	17/A	17/A	17/A	17/A
0.1 + 0.1 in (3 + 3 mm)	N°/class	10/A	10/A	10/A	10/A	10/A	10/A
Net weight (with cables, hoses, suspension without arms)	lbs (kg)	172 (78)	181 (82)	192 (87)	174 (79)	183 (83)	194 (88)
Balancer: short arms long arms	part # part #	9371 9422	9371 9422	9422 9422	9371 9422	9371 9422	9422 9422
Standard Control	part #	TE470	TE470	TE470	TE470	TE470	TE470

* Other voltage/frequency combinations are available
** Use class K slow blow fuses or circuit breaker with instantaneous trip

ARMS FOR 3154, 3160, 3166, 3156, 3162, 3168

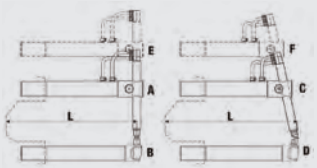

Custom arm configurations available

L	in (mm)	10.0 (255)	16.1 (408)	24.0 (610)	32.3 (820)	40.6 (1030)
A	Part #	**4420**	**4426**	**4432**	**4438**	**4444**
B	Part #	**4424**	**4430**	**4436**	**4442**	**4448**
C	Part #	**4421**	**4427**	**4433**	**4439**	**4445**
D	Part #	**4425**	**4431**	**4437**	**4443**	**4449**
E	Part #	**4422**	**4428**	**4434**	**4440**	**4446**
F	Part #	**4423**	**4429**	**4435**	**4441**	**4447**

DIMENSIONS FOR 3020, 3024, 3032, 3040

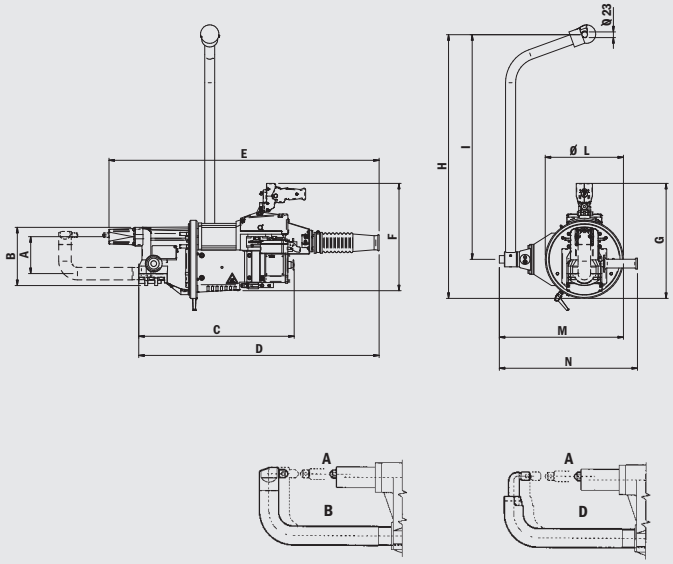

	3020 in (mm)	3024 in (mm)	3032 in (mm)	3040 in (mm)
A	5.5 (140)	5.5 (140)	5.8 (148)	5.8 (148)
B	8.7 (220)	8.7 (220)	9.1 (230)	9.1 (230)
C	24.8 (630)	24.8 (630)	25.2 (640)	25.2 (640)
D	34.6 (880)	34.6 (880)	35.8 (910)	35.8 (910)
E	39.0 (990)	39.0 (990)	40.4 (1025)	40.4 (1025)
F	15.9 (405)	15.9 (405)	17.3 (440)	17.3 (440)
G	16.3 (415)	16.3 (415)	18.5 (470)	18.5 (470)
H	38.2 (970)	38.2 (970)	39.2 (995)	39.2 (995)
I	33.4 (848)	33.4 (848)	33.4 (848)	33.4 (848)
Ø L	9.6 (244)	9.6 (244)	11.6 (294)	11.6 (294)
M	16.1 (410)	16.1 (410)	19.3 (490)	19.3 (490)

Custom arm configurations available

DIMENSIONS FOR 3154, 3160, 3166, 3156, 3162, 3168

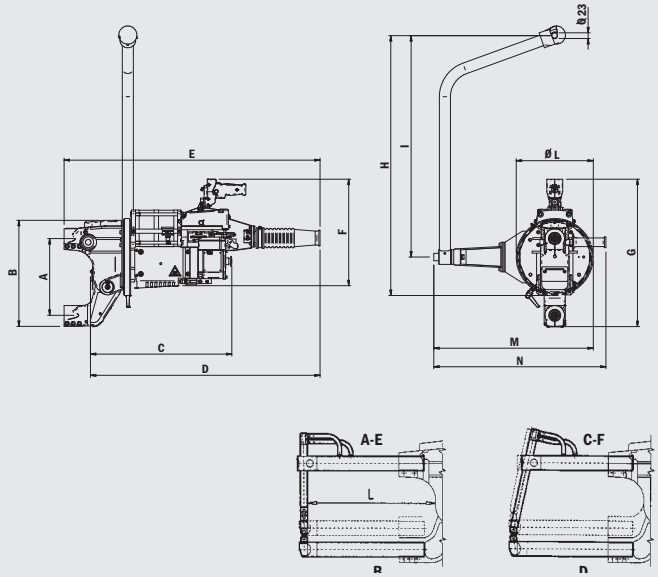

	3154 in (mm)	3160 in (mm)	3166 in (mm)	3156 in (mm)	3162 in (mm)	3168 in (mm)
A	8.7 (220)	8.7 (220)	8.7 (220)	12.4 (315)	12.4 (315)	12.4 (315)
B	13.4 (340)	13.4 (340)	13.4 (340)	17.1 (435)	17.1 (435)	17.1 (435)
C	21.7 (552)	22.4 (570)	24.5 (622)	21.7 (552)	22.4 (570)	24.5 (622)
D	34.3 (870)	34.3 (870)	34.8 (885)	34.3 (870)	34.3 (870)	34.8 (885)
E	38.2 (970)	38.2 (970)	38.8 (985)	38.2 (970)	38.2 (970)	38.8 (985)
F	16.9 (430)	16.9 (430)	16.9 (430)	16.9 (430)	16.9 (430)	16.9 (430)
G	19.7 (500)	19.7 (500)	19.7 (500)	23.4 (595)	23.4 (595)	23.4 (595)
H	39.2 (995)	39.2 (995)	39.2 (995)	39.2 (995)	39.2 (995)	39.2 (995)
I	33.4 (848)	33.4 (848)	33.4 (848)	33.4 (848)	33.4 (848)	33.4 (848)
Ø L	11.6 (294)	11.6 (294)	11.6 (294)	11.6 (294)	11.6 (294)	11.6 (294)
M	19.3 (490)	19.3 (490)	19.3 (490)	23.0 (585)	23.0 (585)	23.0 (585)

L in (mm)	F @ 94 psi (6 bar) lbs (daN)	F @ 115 lbs (8 bar) lbs (daN)	Arm Weight lbs (kg)
10.0 (255)	1419 (645)	1881 (855)	~19.8 (9)
16.1 (408)	946 (430)	1265 (575)	~28.6 (13)
24.0 (610)	660 (300)	880 (400)	~37.4 (17)
32.3 (820)	506 (230)	671 (305)	~48.4 (22)
40.6 (1030)	407 (185)	539 (245)	~61.6 (28)

Custom arm configurations available

Specifications subject to change without notice.

SPRING BALANCERS

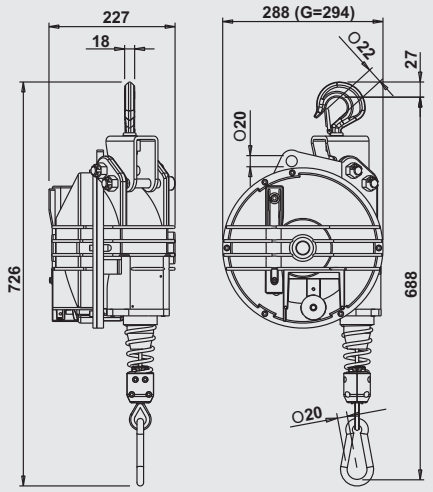

Part #	load range lbs (kg)	stroke length in (mm)	weight lbs (kg)	packaging lbs (kg)	shipping dimensions in (mm)
9412BR	154 - 176 (70 - 80)	98.4 (2500)	61 (27.8)	68 (31)	23.6 x 12.6 x 13 (600 x 320 x 330)
9413BR	175 - 198 (80 - 90)	98.4 (2500)	63 (28.8)	71 (32)	23.6 x 12.6 x 13 (600 x 320 x 330)
9422BR	220 - 265 (100 - 120)	98.4 (2500)	85 (38.7)	94 (42.5)	23.6 x 12.6 x 13 (600 x 320 x 330)

Option "R", lower swivel type hook.
Option "B", lock control from the floor.

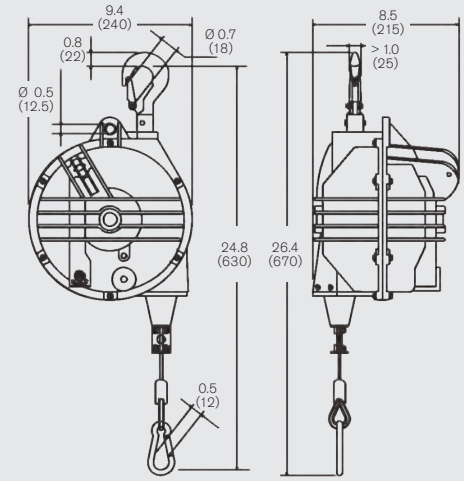

Part #	load range lbs (kg)	stroke length in (mm)	weight lbs (kg)	packaging lbs (kg)	shipping dimensions in (mm)
9367BR	99 - 121 (45 - 55)	78.74 (2000)	28 (12.5)	32 (14.5)	17.9 x 10.6 x 11 (455 x 270 x 280)
9368BR	121 - 143 (55 - 65)	78.74 (2000)	30 (13.6)	34 (15.6)	17.9 x 10.6 x 11 (455 x 270 x 280)
9369BR	143 - 165 (65 - 75)	78.74 (2000)	32 (14.5)	36 (16.5)	17.9 x 10.6 x 11 (455 x 270 x 280)

Option "R", lower swivel type hook.
Option "B", lock control from the floor.

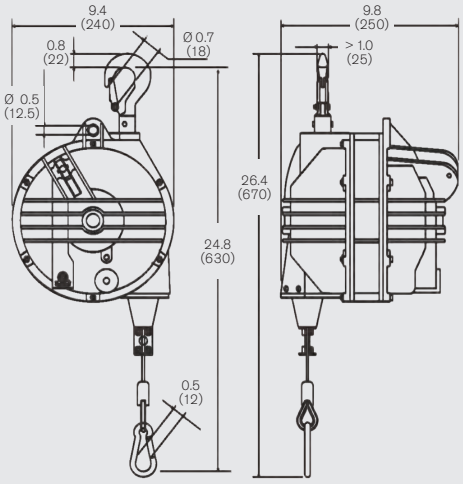

Part #	load range lbs (kg)	stroke length in (mm)	weight lbs (kg)	packaging lbs (kg)	shipping dimensions in (mm)
9370BR	165 - 198 (75 - 90)	78.74 (2000)	38 (17.3)	42 (19)	17.9 x 10.6 x 11 (455 x 270 x 280)
9371BR	198 - 232 (90 - 105)	78.74 (2000)	40 (18)	44 (20)	17.9 x 10.6 x 11 (455 x 270 x 280)

Option "R", lower swivel type hook.
Option "B", lock control from the floor.

MORE TECNA PRODUCTS AVAILABLE FROM T. J. SNOW

ROCKER ARM SPOT WELDERS

VERTICAL PRESS-TYPE SPOT WELDER

2 - 6 KVA PORTABLE SPOT WELDERS

SPARE PARTS & SUPPLIES

T. J. SNOW

www.tjsnow.com | welders@tjsnow.com | 1-800-NOW-SNOW (669-7669)
120 Nowlin Ln, Chattanooga, TN 37421 | (423) 894-6234
PO Box 22847, Chattanooga, TN 37422