MODEL	CHRYSLER MODEL NO.	KVA @ 50% DC	PRIMARY VOLT/FREQ	SECONDARY VOLTAGE (DC) LO-TAP	SECONDARY VOLTAGE (DC) HI-TAP	TURNS RATIO LO-TAP	TURNS RATIO HI-TAP	WEIGHT LBS
TDC-1070	91-901-1201	170	650/1000	9.5	13.0	68:1	50:1	100
TDC-5628		170	800/1000	9.5	13.1	84:1	61:1	100

COOLING REQUIREMENTS: 2 GPM PER CIRCUIT @ 30°C MAX
4 GPM TOTAL

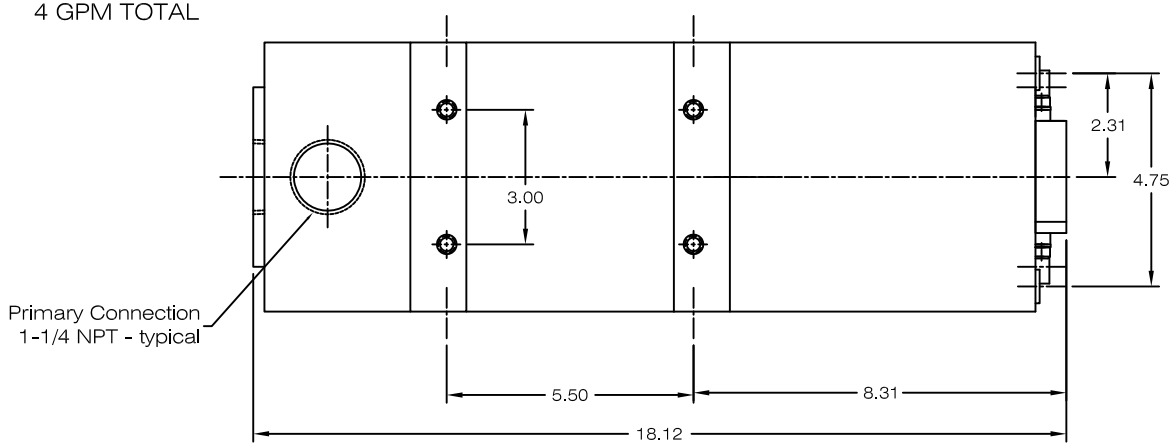

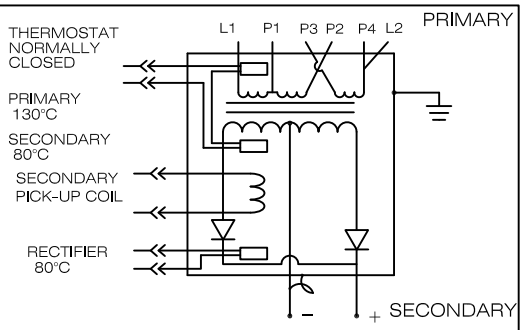

TRANSFORMER CASE MUST BE GROUNDED. TRANSFORMER WILL BE SHIPPED WITH A JUMPER CONNECTING SECONDARY CENTER TAP TO CASE. USER MUST PROVIDE APPROPRIATE GROUNDING OF SECONDARY CIRCUIT. FOR APPLICATIONS ABOVE A 20% DUTY CYCLE, CONTACT ROMAN MANUFACTURING FOR ASSISTANCE.

NOTE*
The secondary terminals of this device are intended as an electrical connection only. Applications must be designed to minimize any forces applied to the secondary terminals, this can be accomplished by transferring forces to a structural member.

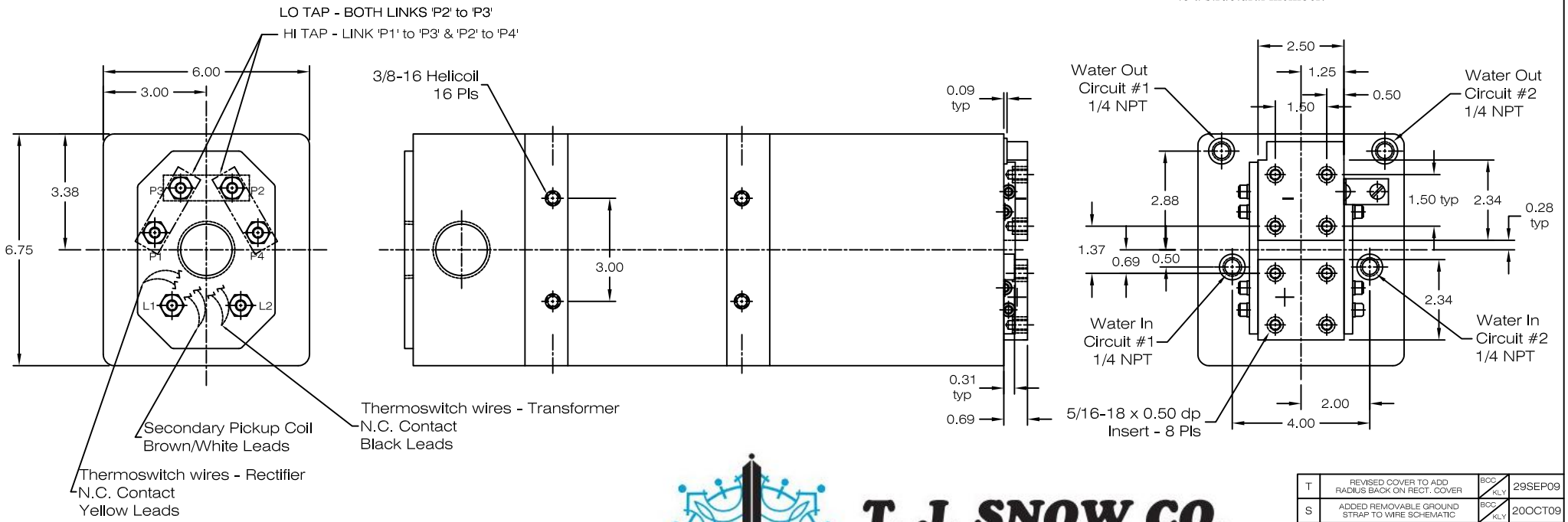

T. J. SNOW CO.
120 Nowlin Lane • P.O. Box 22847
Chattanooga, Tennessee 37421
Phone: (423) 894-6234 • Fax: (423) 892-3889
welders@tjsnow.com or www.tjsnow.com

REV	DESCRIPTION		DATE
T	REVISED COVER TO ADD RADIUS BACK ON RECT. COVER	BCC / KLY	29SEP09
S	ADDED REMOVABLE GROUND STRAP TO WIRE SCHEMATIC	BCC / KLY	20OCT09
R	REMOVED RADIUS FROM RECTIFIER COVER	BCC / KLY	25SEP09

THIS DRAWING AND ALL THE INFORMATION AND TECHNOLOGY IN IT ARE EXCLUSIVE, CONFIDENTIAL AND PROPRIETARY TO RoMan MFG, INC. THIS DRAWING IS OWNED BY RoMan MFG, INC. AND UNLESS SPECIFICALLY AUTHORIZED IN WRITING, NO COPIES SHALL BE MADE OF THIS DRAWING, AND SHALL BE USED ONLY FOR THE LIMITED PURPOSE FOR WHICH IT IS DISCLOSED AND ONLY TO THE BENEFIT OF RoMan MFG, INC., AND IT AND ANY COPIES, AUTHORIZED OR NOT, SHALL BE IMMEDIATELY RETURNED UPON ANY REQUEST THEREFORE.

SCALE: NONE
DATE: 15JUL98
RoMan
DRAWN BY: ACG
WEIGHT:

TDC-1070 POWER SUPPLY

DRAWING NUMBER: 1010330

1010330

Power Supply Rating Diagram, Single Phase, Center Tap Rectifier.
4 Diode(s) per rectifier leg
8 Diodes total

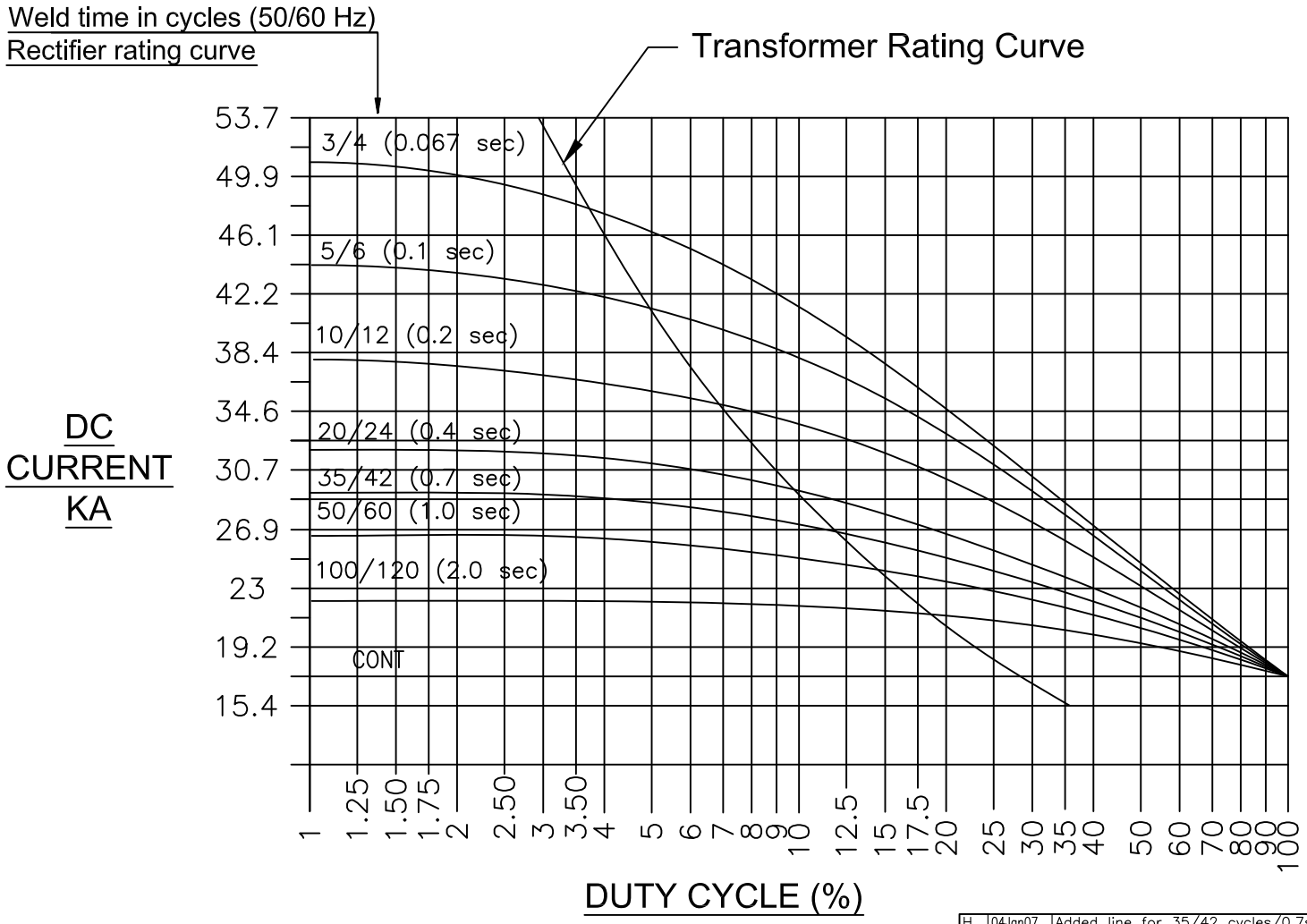

Where used
TDC-1026
TDC-1058
TDC-1062
TDC-1070
TDC-1078
TDC-1116
TDC-1131
TDC-5517
TDC-5620

Notes:
These curves are based on rated water flow of 4 G.P.M (15 L.P.M.).
Maximum water in temperature of 30°C.
For applications above a 20% duty cycle, contact
Roman Manufacturing for assistance.

Rectifier Rating:
% Duty Cycle is based on shortest time from beginning of one weld to the beginning of next weld. On time/(On + Off time).

Transformer Rating:
% Duty Cycle is total "On" time in one minute.

REV	DATE	DESCRIPTION	
H	04Jan07	Added line for 35/42 cycles/0.7s	KLY
G	19Jan06	Added TDC-1131 to Where Used	KLY

THIS DRAWING AND ALL THE INFORMATION AND TECHNOLOGY IN IT ARE EXCLUSIVE, CONFIDENTIAL AND PROPRIETARY TO RoMan MFG. INC. THIS DRAWING IS OWNED BY RoMan MFG. INC. AND UNLESS SPECIFICALLY AUTHORIZED IN WRITING, NO COPIES SHALL BE MADE OF THIS DRAWING, AND SHALL BE USED ONLY FOR THE LIMITED PURPOSE FOR WHICH IT IS DISCLOSED AND ONLY TO THE BENEFIT OF RoMan MFG. INC., AND IT AND ANY COPIES, AUTHORIZED OR NOT, SHALL BE IMMEDIATELY RETURNED UPON ANY REQUEST THEREFORE.

SCALE: NONE
DATE: 1JUL98
RoMan
DRAWN BY: KLY
WEIGHT:

Rating Curve

DRAWING NUMBER: 1110079

1110079