INSTRUCTION MANUAL

700121F

EN2000 SERIES CONTROLS

NEMA TYPE: S2HX

MICROPROCESSOR BASED
Weld Sequence Controls
With
Solid State Thyristor Contactors

Wiring Diagram	421280	S Cabinet
	421282	E Cabinet
	421283	T/D/LS/LF Cabinet

ENTRON Controls, LLC.
1402 S. Batesville Road
Greer, South Carolina 29650
(864) 416-0190
FAX: (864) 416-0195
www.entroncontrols.com

THIS PAGE IS INTENTIONALLY BLANK

ENTRON Controls, LLC.

MICROPROCESSOR BASED WELDING CONTROLS

INSTALLATION AND OPERATION MANUAL FOR:
Model Series EN2000 NEMA Type: S2HX

! CAUTION !
READ THIS MANUAL COMPLETELY BEFORE ATTEMPTING TO INSTALL OR OPERATE THIS CONTROL

ENTRON Controls, LLC., reserves the right to alter the contents of this manual without previous notice.

ENTRON Controls, LLC.
Greer, South Carolina 29650

TABLE OF CONTENTS

TABLE OF CONTENTS (cont.)

FIGURES

TABLES

THIS PAGE IS INTENTIONALLY BLANK

1.0 GENERAL DESCRIPTION

The EN2000 is a microprocessor-based resistance welding control. It can store as many as five parameters in each of two unique schedules. These are held in non-volatile memory for storage. It can perform Squeeze, Weld, Hold, and Off. The EN2000 is simple to program and operate. Versatility is built in to allow the individual to configure the control to many applications.

This control provides an accurate, predetermined welding schedule for a specific number of cycles upon an external command. The initiation command is usually provided by the closure of a normally open switch, located on or installed as part of the welding machine, which starts the welding interval. The initiation switch need not remain closed for the duration of the weld, but must be opened after the welding interval is completed in order to re-initiate the control. After a weld has been started, the control cannot be re-initiated until the previous weld is completed. All control functions are performed digitally.

1.1 STANDARD FEATURES (ALL MODELS)

DIGITAL PHASE SHIFT CURRENT CONTROL varies the current from 0% to 99% of maximum and is adjusted in 1% RMS current steps by Front Panel push buttons with direct reading LED displays. When the control is used with ignitron tube contactors, do not set below 40% for 240 volt operation or 20% for 480 volt operation.

FUNCTION CYCLE COUNT SELECT circuit uses Front Panel push button with direct reading LED displays to select the function intervals absolutely in 1 cycle steps. Timing is achieved by counting each cycle of the line current directly. This method of timing allows this control to be used on either 50 or 60 Hz power. See Section 7.3.4 for selection of 50 or 60 Hz operation.

NOTICE
NO ADJUSTMENT is required for power factor of welding machine (see Section 7.3.3).

PRESSURE SWITCH FIRING is a Terminal Strip connection which allows the control to be initiated from a Pressure Switch closure. Remove the jumper from TS1-PS1 and TS1-GND and connect Pressure Switch leads. Pressure Switch is not furnished with control.

87° DELAYED FIRST HALF-CYCLE FIRING delays the first half-cycle of each weld sequence by 87°. The purpose of the 87° DELAY is to prevent the build-up in the welding transformer of a DC component which may be damaging when wound core (hypersil) transformers are used.

EMERGENCY STOP is a Terminal Strip connection that allows all control functions to be reset upon opening of the Emergency Stop Switch. Control will not be re-initiated automatically upon release of the switch and must be re-initiated through the normal initiation circuit. Remove the jumper from TS1-ES1 and TS1-GND and install a normally closed switch. Emergency Stop Switch is not furnished with control.

1.1 STANDARD FEATURES (cont.)

VALVE CONTROL TRANSFORMER provides the necessary voltage for powering the welding machine solenoid valve. Input voltage may be either 240 or 480 VAC (see appropriate Wiring Diagram). Output is 115 VAC (optional low voltage transformer for certain operations provides a 24/48 VAC output). A 150 VA transformer is standard in “E”, “T/D”, and NEMA enclosures (250 VA transformer optional). A 50 VA transformer is provided in the “S” Style Cabinet.

! CAUTION !

When external valve power is used (24 to 115 VAC), valve transformer must be disconnected at TS3-VL1 and TS3-VL2. Caution must be used to properly insulate the wires from T3-X1 and T3-X2 leads after removing from TS3.

2.0 CONTROL PANEL LAYOUT

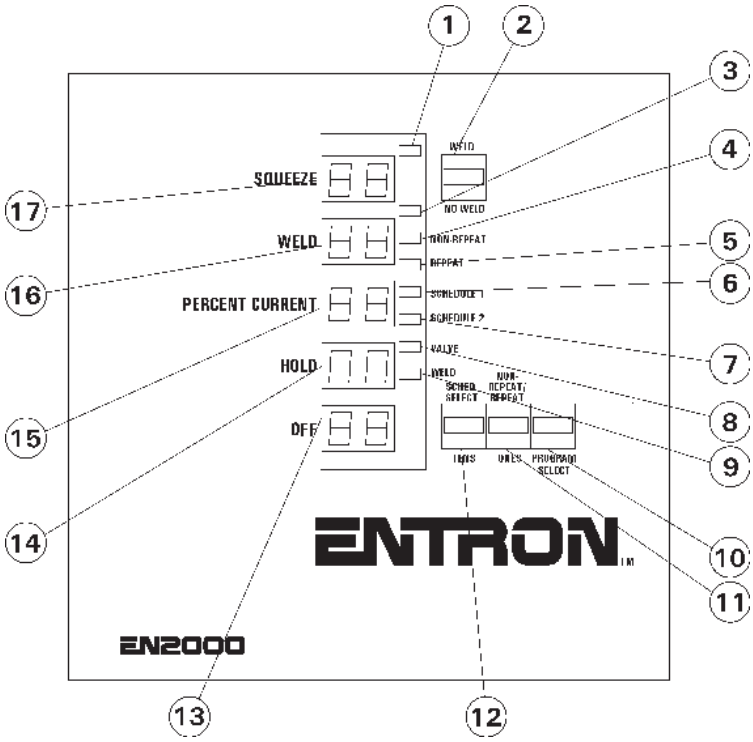

Figure 2-1. *Control Panel layout*

1 - WELD mode indicator LED
2 - WELD/NO WELD push button
3 - NO WELD mode indicator LED
4 - NON-REPEAT indicator LED
5 - REPEAT indicator LED
6 - SCHEDULE 1 indicator LED
7 - SCHEDULE 2 indicator LED
8 - VALVE indicator LED
9 - WELD indicator LED
10 - PROGRAM SELECT push button
11 - NON-REPEAT/REPEAT / ONES push button
12 - SCHEDULE SELECT / TENS push button
13 - OFF function display
14 - HOLD function display
15 - PERCENT CURRENT function display
16 - WELD function display
17 - SQUEEZE function display

2.1 CONTROL FUNCTIONS – See Figure 2-1. *Control Panel layout*

WELD/NO WELD PUSH BUTTON (2) **and INDICATOR LEDs** (1,3) **–** When the control is in NO WELD, the NO WELD indicator LED (3) is illuminated. This allows the control to be initiated without passing current through the welding transformer. When the WELD indicator LED (1) is illuminated, the SCR Contactor will pass current through the welding transformer during the programmed WELD time. To toggle between these two modes, simply depress the WELD/NO WELD push button (2).

WELD INDICATOR LED (9) – This LED will illuminate when the weld control is in the WELD function and Front Panel WELD/NO WELD push button is used to set control to WELD and the External Weld/No Weld Switch is closed.

NON-REPEAT INDICATOR LED (4) – This LED will illuminate when the displayed schedule is set to NON-REPEAT.

REPEAT INDICATOR LED (5) – This LED will illuminate when the displayed schedule is set to REPEAT.

SCHEDULE 1 INDICATOR LED (6) – This LED will illuminate when schedule 1 is selected.

SCHEDULE 2 INDICATOR LED (7) – This LED will illuminate when schedule 2 is selected.

VALVE LED INDICATOR LED (8) – This LED will illuminate when the solenoid valve is activated.

PROGRAM SELECT PUSH BUTTON (10) **–** This push button is used to put the control in PROGRAM mode to select functions and to return to OPERATE mode. When the control is in OPERATE mode, all function displays (13-17) are equally illuminated. Upon successively pressing the PROGRAM SELECT push button, the displays become bright one at a time indicating that the bright display function can be programmed. To return the control to OPERATE mode, the PROGRAM SELECT push button can be successively pressed until all displays are of equal brightness.

NON-REPEAT/REPEAT / ONES PUSH BUTTON (11) – This push button has two uses. When in PROGRAM mode, it is used to increment the selected function's ones digit. When in OPERATE mode, the displayed schedule can be toggled between NON-REPEAT or REPEAT by depressing and holding this push button until the display changes.

SCHEDULE SELECT / TENS PUSH BUTTON (12) **–** This push button has two uses. When in PROGRAM mode, it is used to increment the selected function's tens digit. When in OPERATE mode, the display can be toggled between SCHEDULE 1 or SCHEDULE 2 by depressing and holding this push button until the display changes.

FUNCTION DISPLAYS (13-17) **–** The SQUEEZE, WELD, PERCENT CURRENT, HOLD, and OFF function displays always indicate the programmed setting of SQUEEZE, WELD, PERCENT CURRENT, HOLD, and OFF for the selected schedule.

3.0 TIME PARAMETERS (Count Functions)

SQUEEZE ..... 0 to 99 cycles (Programmed 00 = 0 cycles)
WELD/HEAT ..... 0 to 99 cycles (Programmed 00 = 0 cycles)
HOLD ..... 0 to 99 cycles (Programmed 00 = 0 cycles)
OFF ..... 0 to 99 cycles (Programmed 00 = 0 cycles)

NOTICE
NO ADJUSTMENT is required for power factor or timing to change from 60 Hz to 50 Hz operation.

SQUEEZE COUNT (17) – The time duration for the electrodes to close on the work and build up pressure before WELD count begins.

WELD COUNT (16) – The time during which current will flow through the welding transformer after SQUEEZE count (or after closure of a Pressure Switch).

HOLD COUNT (14) – The time duration after WELD count that the welding electrodes remain in contact with the work to allow the weld nugget to congeal.

OFF COUNT (13) – In the REPEAT mode, the time during which the electrodes separate. OFF count occurs between HOLD count and SQUEEZE count to allow the work to be repositioned.

3.1 OTHER PROGRAMMABLE FUNCTIONS

PERCENT CURRENT (15) (Phase Shift) – 0% to 99%, adjustable in 1% RMS current steps.

4.0 TWO STAGE PILOT INITIATION

This control may be initiated by the closure of a Two Stage Pilot. First Stage is connected to TS1-FS1 and TS1-GND; Second Stage is connected to TS1-FS3 and TS1-GND. The First Stage only activates the selected solenoid valve for the selected schedule and does **NOT** initiate a sequence. Once the control is initiated via FS3, FS1 need not remain closed. The initiation circuit is automatically clamped to prevent re-initiation until after the control has completed its sequence. In REPEAT mode, the control will continue to sequence as long as the initiation remains closed.

4.1 SINGLE STAGE PILOT INITIATION

This control may be initiated by the closure of a Single Stage Pilot. The Pilot Switch is connected between TS1-FS3 and TS1-GND terminals. Once the control is initiated, the switch need not remain closed. The initiation circuit is automatically clamped to prevent re-initiation until after the control has completed the sequence. No connection is made to TS1-FS1. See Section 5.2 for more information.

4.2 OTHER CHARACTERISTICS

PRESSURE SWITCH – If the Pressure Switch is open, the control will advance through SQUEEZE time and wait until the Pressure Switch closes before advancing to WELD time. The SQUEEZE function display will begin flashing at the end of SQUEEZE time and continue until the Pressure Switch closes. When the Pressure Switch closes, the control will begin WELD time and complete the sequence. It may be desired to set SQUEEZE count to **00**. This allows the weld sequence to begin immediately upon closure of the Pressure Switch. If the Pressure Switch interrupts the sequence for an extended period, the display will flash ERROR CODE **15**. This error will not terminate the weld sequence. Once the Pressure Switch closes, the sequence will continue on to WELD time and complete the sequence. See Section 5.3 for further details.

NOTICE
Jumper TS1-PS1 and TS1-GND if Pressure Switch is not used. A Pressure Switch is not furnished with the control.

CONTACTOR TEMPERATURE LIMIT SWITCH – If the Temperature Limit Switch is open (over temperature), the control cannot be initiated. The initiation will remain inactive until the Temperature Limit Switch cools (resets/closes). If the Temperature Limit Switch is open during WELD time, the firing pulses to the contactor will continue until the end of WELD time; HOLD and OFF time will then follow. A new sequence cannot be initiated as above until the Temperature Limit Switch cools and resets (closes). The display will show ERROR CODE **01** until the Temperature Limit Switch recovers its normally closed state. At this time, the display will again show the DATA stored in the currently selected function.

Depending upon machine requirements, a Flow Switch can either be substituted for a Temperature Limit Switch or wired in series with the Temperature Limit Switch. The operation as described above will be similar.

NOTICE
Jumper TS1-TLS1/AUX1 and TS1-GND if the Temperature Limit Switch is not used. Temperature Limit Switch is supplied standard with 300, 600, 1200, 1800, and 2200 AMP SCR Contactors.

EMERGENCY STOP – This is a Terminal Strip connection which allows all control functions to be reset upon opening of the Emergency Stop Switch. The control cannot be re-initiated automatically upon release of the switch and must be re-initiated through the re-closure of the pilot circuit. While in the Emergency Stop condition, the control will flash ERROR CODE **E.S.** in the display until the condition has been cleared.

NOTICE
Jumper TS1-ES1 and TS1-GND if the Emergency Stop Switch is not used. Emergency Stop Switch is not supplied with the control.

4.2 OTHER CHARACTERISTICS (cont.)

INTERLOCKING DOOR SOLENOID (IDS) – The control may include an IDS to prevent entry to the control when power is applied. An IDS is included (unless otherwise specified) in "S" and "E" Style Cabinets. "T/D", "L" and other NEMA 12 Style Cabinets DO NOT include interlocking door solenoids.

! WARNING !
The IDS is protected by fuse F1 (6/10A). If the fuse is blown or missing, the IDS will not operate and will not prevent entry to cabinet.

OPERATING CONDITIONS – Temperature Range: 0°C to 70°C (32°F to 158°F).

4.3 NON-VOLATILE MEMORY ERROR (ERROR CODE 14)

The EN2000 Series Controls make extensive use of non-volatile memory devices. These devices are sometimes susceptible to corruption due to electrical noise present in some systems.

To detect effects of electrical noise on the control, upon power-up or return from Emergency Stop, the control executes a diagnostic test that reads all memory locations within the schedule storage areas. If the microcontroller finds invalid data, it displays ERROR CODE 14 with the schedule number where the invalid data is stored.

Physically isolating high voltage wires from low voltage wires will reduce the introduction of electrical noise into the control (see Figure 4-1).

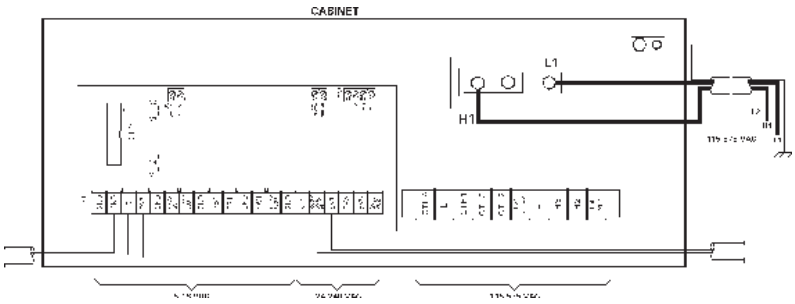

Figure 4-1. *Recommended low and high voltages conduit wiring and routing*

If ERROR CODE 14 occurs, the following procedure should be performed to clear this error:

1. Turn the power **off**.
2. Press and hold PROGRAM SELECT push button.
3. Turn the power **on**.
4. Release PROGRAM SELECT push button.

NOTICE
If ERROR 14 persists, you may need to isolate high voltage wires (valve outputs, etc.) from low voltage wires (initiation inputs). Re-routing each type of wire to a separate grounded conduit may restore the control to normal operation.

NOTICE
If ERROR 14 is NOT flashing or appears in PROGRAM mode, the main Control Board may need repair.

5.0 VOLTAGE PROGRAMMING

! CAUTION !

WHEN THE WELDING CONTROL AND/OR WELDING MACHINE WAS SHIPPED, THE VOLTAGE AT WHICH IT WAS SET WAS MARKED ON THE TAG ATTACHED TO THE CONTROL TERMINAL BLOCK.

! WARNING !

THIS WELDING CONTROL IS A MULTI-VOLTAGE UNIT WHICH CAN BE CHANGED FROM ONE VOLTAGE TO ANOTHER BY RE-ARRANGING JUMPERS ON THE TERMINAL STRIP FOUND INSIDE THE UNIT. IF THE CONTROL IS USED ON A VOLTAGE OTHER THAN THE ONE FOR WHICH IT IS WIRED, SERIOUS DAMAGE CAN RESULT.

It is possible to operate the EN2000 Control at 208, 240, 380, 480, and 575 VAC. When a 380 or 575 VAC main is desired, please consult the factory. When the control is converted from one line voltage to another, there are three changes required:

1. Control Transformer: Jumpers on TS1-L2/CTH4, CTH2, CTH3, and CTH1 must be configured to match the line voltage.
2. Sense Transformer: Jumpers on TS1-H4, TS1-H2, TS1-H3, and TS1-H1 must be configured to match the line voltage.
3. Valve Transformer: Jumpers on the valve transformer H1, H3, H2, and H4 must be configured to match the line voltage.

Table 5-1. *Operation Jumpers*

	208/240 Volt Operation	480 Volt Operation
Terminal Strip TS1	Jumper H1/H3 and H2/H4 Jumper CTH1/CTH3 and CTH2/CTH4	Jumper H3/H2 Jumper CTH3/CTH2
Valve Transformer	Jumper H1/H3 and H2/H4	Jumper H3/H2

! CAUTION !

PROVIDE A GOOD WATER PIPE GROUND AT THE GROUND LUG LOCATED IN THE REAR OF THE CONTROL CABINET.

! CAUTION !

When external valve power is used (24-240 VAC), valve transformer must be disconnected at TS3-VL1 and TS3-VL2. Caution must be used to properly insulate the wires from T3-X1 and T3-X2 leads after removing from TS3.

NOTICE

Whether valve power is supplied by the Valve Transformer or by an external valve power supply, the maximum current that can be switched by the Firing Board is 1 AMP. If more current is desired, the valve circuit should be wired to a relay having a suitable contact rating to switch the desired valve. For more information, refer to appropriate Wiring Diagram.

5.1 FUSING

CONTROL FUSE

This fuse, a 1/4 AMP, is used to protect the control circuits. The fuse holder is located within the cabinet.

VALVE FUSE

This fuse, a 2AG 1 AMP, is used to protect the valve circuits. The fuse is located on Terminal Strip PCB2 (A/N 410319-006 or 410319-007).

IGNITOR FUSES

(Supplied with ignitron tube retrofit controls only). These fuses, BAF 6 AMP, are used to protect the ignitor circuits of the ignitron tubes. The fuse holders are located on the Ignitron Firing Board Module PCB3 (A/N 410318).

! CAUTION !

INSTALL PROPERLY SIZED FUSES IN SERVICE DISCONNECT SWITCH.
CHECK WELDING MACHINE MANUFACTURER'S RECOMMENDATIONS.

! DANGER !

VOLTAGES PRESENT IN THIS CONTROL CAN CAUSE SEVERE OR FATAL INJURY.
DO NOT CHANGE FUSES WITH THE POWER ON.
USE ONLY THE TYPE OF FUSE SPECIFIED TO MAINTAIN SAFE OPERATION.

5.2 TERMINAL STRIP DIAGRAMS

See front page for appropriate Wiring Diagram.

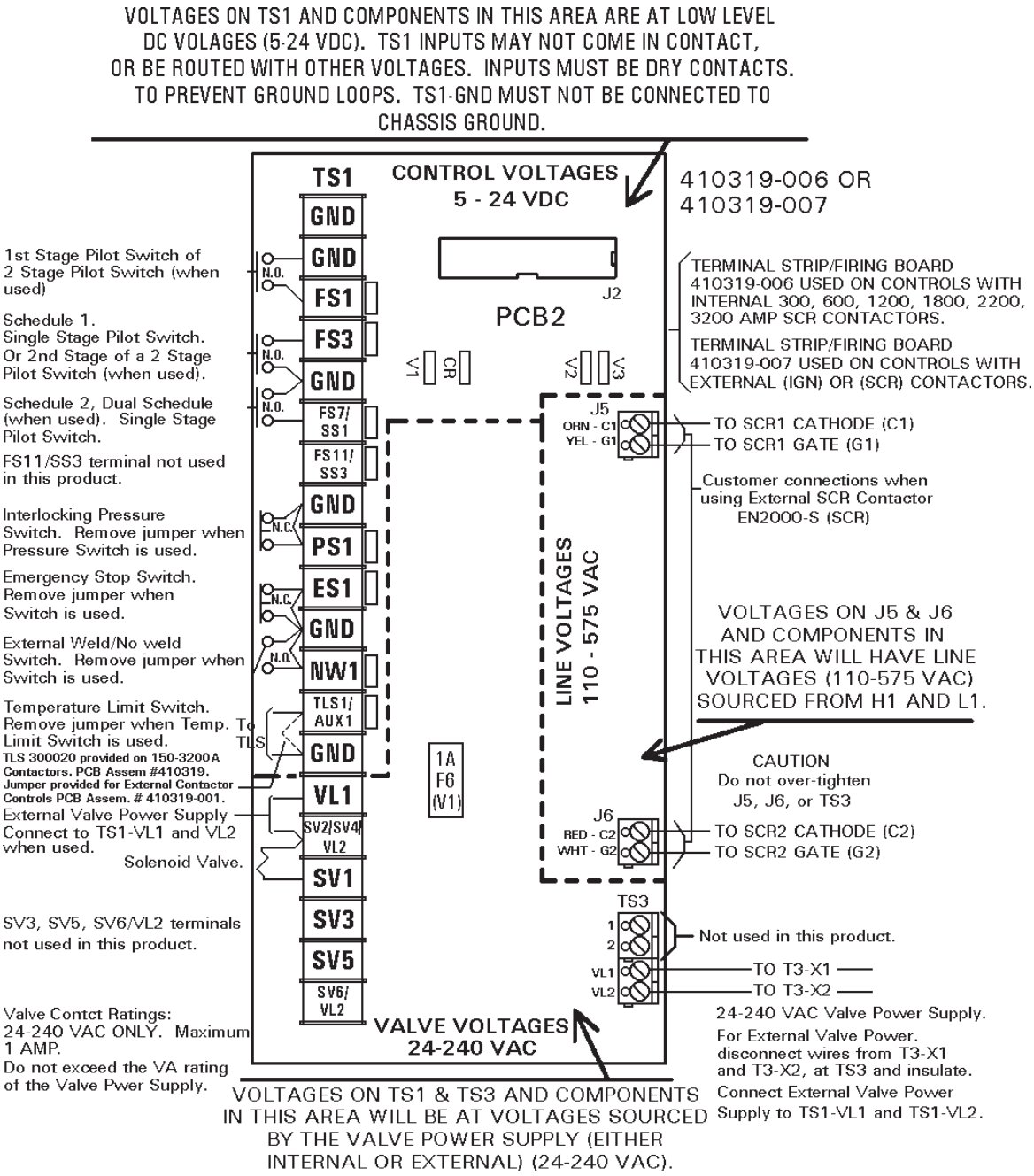

Figure 5-1. *Terminal Strip TS1/PCB2*

5.2 TERMINAL STRIP DIAGRAMS (cont.)

See front page for appropriate Wiring Diagram.

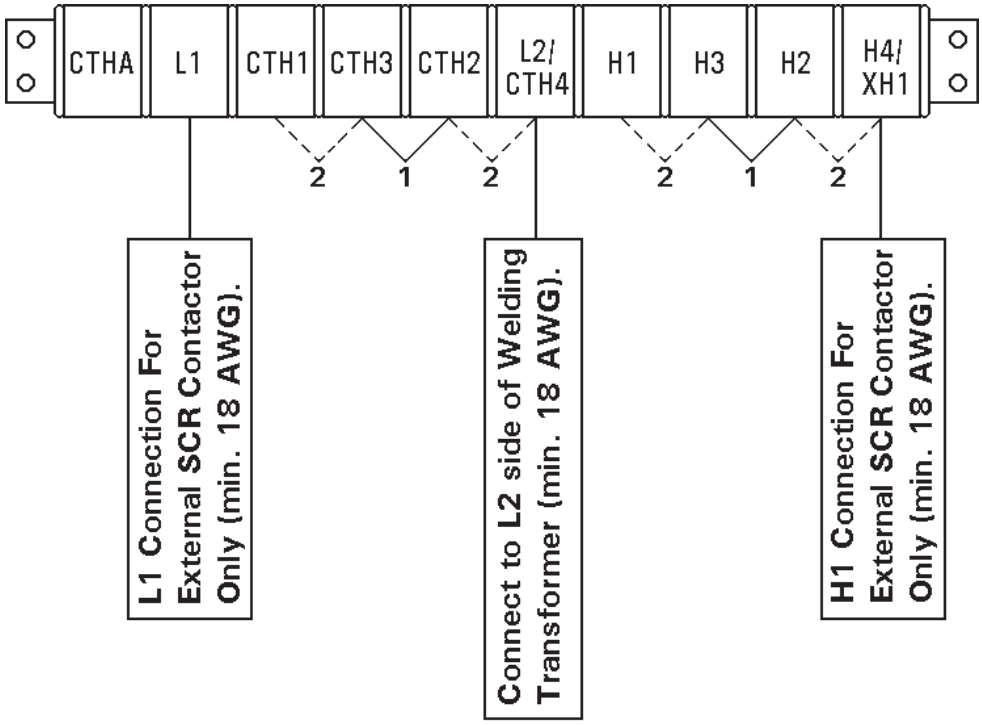

For 480 VAC Operation – Use Jumpers #1
For 240 VAC Operation – Use Jumpers #2
For 208 VAC Operation – Use Jumpers #2
For 380 VAC Operation – Consult Factory

For 575 VAC Operation – **FACTORY WIRED ONLY**

Figure 5-2. *Voltage operation jumpers settings*

5.2 TERMINAL STRIP DIAGRAMS (cont.)

See Wiring Diagram 421280 for “S” Cabinet.

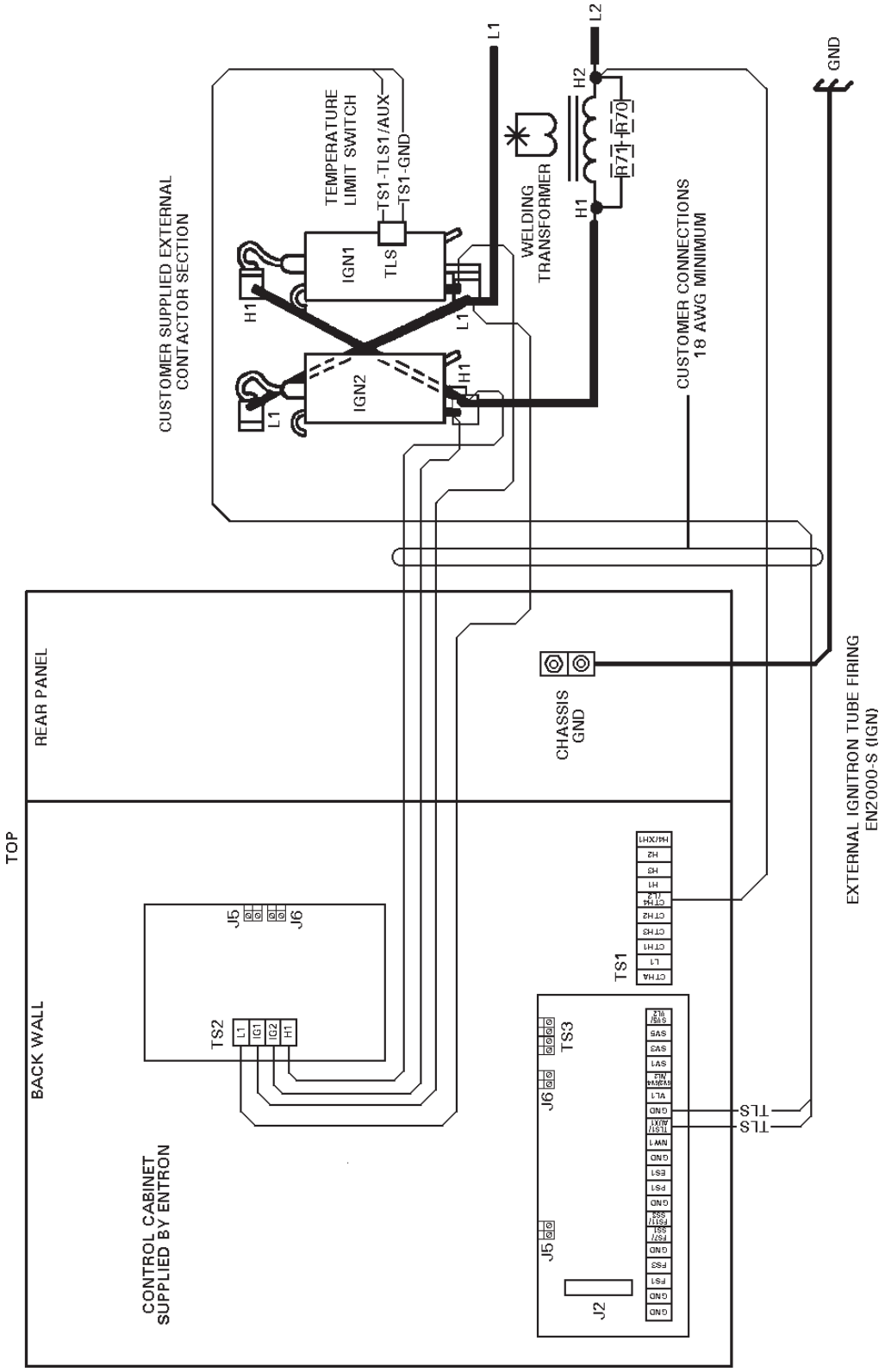

Figure 5-3. *External Ignitron Tube Contactor hook-up*

5.2 TERMINAL STRIP DIAGRAMS (cont.)

See Wiring Diagram 421280 for “S” Cabinet.

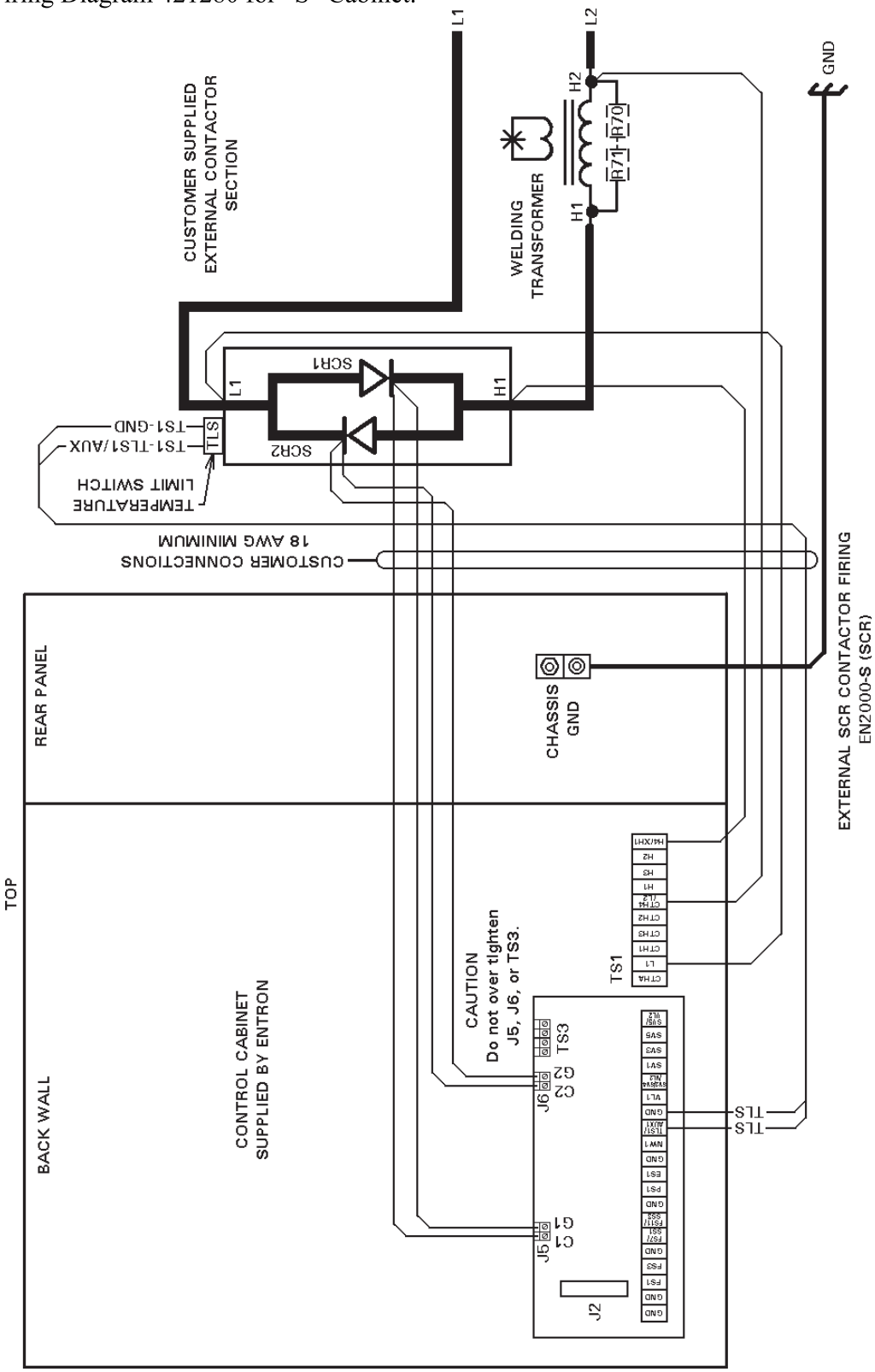

Figure 5-4. *External SCR Contactor hook-up*

5.3 TERMINAL STRIP CONNECTIONS – See Figure 5-1

TS1-GND

Used as the common connection point for most all of the other Terminal Strip connections. There are six GND terminals provided on TS1. **DO NOT** connect **any** TS1-GND terminals directly to chassis ground. All initiations are ground based. A connection does exist between chassis GND and all six TS1-GNDs.

TS1-FS1

Used to connect one side of a Two Stage Pilot. Connect the First Stage of a Two Stage Pilot to TS1-FS1 and TS1-GND terminals. Use a single pole, normally open, momentary type switch.

! CAUTION !
A JUMPER IS NOT REQUIRED ON TS1-FS1 TO TS1-GND WHEN A TWO STAGE FOOT SWITCH IS NOT USED.

TS1-FS3

Used to connect one side of a Single Stage Pilot. Connect a Single Stage Pilot between TS1-FS3 and TS1-GND terminals. Use a single pole, normally open, momentary type switch.

–or–

Used to connect one side of a Two Stage Pilot. Connect the Second Stage of a Two Stage Pilot to TS1-FS3 and TS1-GND terminals. Use a single pole, normally open, momentary type switch.

When initiated via TS1-FS3, the weld control will run the schedule currently shown on the display.

TS1-FS7

Used to connect one side of the second Single Stage Pilot for Dual Schedule operation. Connect a Single Stage Pilot between TS1-FS7 and TS1-GND terminals. Use a single pole, normally open, momentary type switch.

When initiated via TS1-FS7, the weld control will run schedule 2.

TS1-PS1

Used to connect one side of a Pressure Switch. When used, remove jumper between TS1-PS1 and TS1-GND terminals and use normally open Pressure Switch contacts.

TS1-ES1

Used to connect one side of an Emergency Stop Switch. When used, remove jumper between TS1-ES1 and TS1-GND terminals and install a single pole, normally closed Emergency Stop Switch. It is possible to install several Emergency Stop Switches in series. Activation of any one switch will put the control into the Emergency Stop condition.

5.3 TERMINAL STRIP CONNECTIONS (cont.) – See Figure 5-1

TS1-NW1	Used to connect one side of an External Weld/No Weld Switch. When used, remove jumper between TS1-NW1 and TS1-GND terminals and install a single pole, normally open switch. The switch must be in the closed position to weld.
TS1-TLS1	Used to connect one side of a Temperature Limit Switch. When used, remove jumper and install a Temperature Limit Switch between TS1-TLS1/AUX1 and TS1-GND terminals. Use a normally closed Temperature Limit Switch.
TS1-VL1	Used to connect one side of external valve power (24-240 VAC) if used.*
TS1-SV1	Used to connect one side of Solenoid Valve coil.
TS1-VL2/SV2	Used to connect other side of external valve power* and other side of Solenoid Valve coil.
TS3-VL1	Used as valve power supply input (FACTORY WIRED).
TS3-VL2	Used as valve power supply input (FACTORY WIRED).

NOTICE

TS3-VL1 and TS3-VL2 are factory wired to the valve transformer. Do not over tighten TS3.

! CAUTION !

* When external valve power is used (24-240 VAC), valve transformer must be disconnected at TS3-VL1 and TS3-VL2. Caution must be used to properly insulate the wires from T3-X1 and T3-X2 leads after removing from TS3.

5.3.1 TERMINAL STRIP TS1 CONNECTIONS – See Figure 5-2

TS1-CTHA,L1, CTH1,CTH3, CTH2,CTH4/L2

Used to properly jumper input voltages to the Control Transformer. L1 is internally connected to control fuse F1.

For 208/240 VAC operation – jumper CTH1 to CTH3 and CTH2 to CTH4/L2.

For 480 VAC operation – jumper CTH3 to CTH2 **only.**

Used also for connections to external SCR Contactors. When required, connect wire (minimum 18 AWG) L1 to L1 side of external Contactor.

TS1-CTHA is a tap on the Control Transformer T1 typically used to power an Interlocking Door Solenoid (IDS) (when used). TS1-CTHA can also be used for 120 or 380 volt operation (see Wiring Diagram).

5.3.1 TERMINAL STRIP TS1 CONNECTIONS (cont.) – See Figure 5-2

TS1-CTH4/L2	L2 is used to provide control power. Connect wire (minimum 18 AWG) from one side of line common to the L2 welding transformer lead. On controls furnished with integrally installed isolation switch or circuit breaker, L2 is factory installed.
TS1-H1,TS1-H3, TS1-H2,TS1-H4/XH1	Used to properly jumper input voltage to the Sense Transformer. For 208/240 VAC operation – jumper H1 to H3 and H2 to H4. For 480 VAC operation – jumper H3 to H2 **only.** Used also for connections to external SCR Contactors. When required, connect wire (minimum 18 AWG) H4/XH1 to H1 side of external Contactor.

5.3.2 EXTERNAL IGNITRON TUBE CONTACTOR CONNECTIONS
– See Figure 5-3 (TS2 is mounted on PCB3)

TS2-L1	Factory connected to the TS1-L1 terminal.
TS2-IG1	Connect to the ignitor lead of Ignitron Tube #1 (the anode of Ignitron Tube #1 is connected to L1).
TS2-IG2	Connect to the ignitor lead of Ignitron Tube #2 (the anode of Ignitron tube #2 is connected to H1).
TS2-H1	Factory connected to the TS1-H4/XH1 terminal.

5.3.3 EXTERNAL SCR CONTACTOR CONNECTIONS
– See Figure 5-4 (J5 and J6 are mounted on PCB2)

J5-C1	Connect to the cathode of SCR1.
J5-G1	Connect to the gate of SCR1.
J6-C2	Connect to the cathode of SCR2.
J6-G2	Connect to the gate of SCR2.

NOTICE
Do not over tighten J5 or J6.

5.4 PRIMARY WIRING TO WELDING CONTACTOR

SCR OR IGNITRON TUBE CONTACTORS

! WARNING !

When power is ON, all exterior surfaces of Ignitron Tubes and SCRs carry line voltages of 240V or 480V.
Contact with these devices may cause serious or fatal injuries.

1. For your convenience, many electrical and mechanical connections have been performed at the factory. Check **ALL** electrical connections to ensure that all connections are tight. Connections may loosen during shipping.

2. Connect the L1 lead from incoming power to the L1 connection located on the contactor assembly. Connect the H1 lead from the welding transformer to the H1 connection located on the contactor assembly. Follow machine manufacturer's recommended wire size for installation. A connection from L2 must be made to TS1-CTH4/L2 to provide power to the control circuitry. Refer to appropriate Wiring Diagram for other connections.

3. When control is supplied with a circuit isolation device, L1 is factory installed and the L2 control wire is connected to TS1-CTH4/L2.

NOTICE

Connect a chassis ground to lug provided on the rear wall in the control cabinet to an external earth ground. A good earth ground is necessary for proper control operation.

5.5 COOLING REQUIREMENTS FOR CONTACTORS

SOLID STATE MANUFACTURER'S COOLING RECOMMENDATIONS

600 AMP SCR Solid State Contactor
1200 AMP SCR Solid State Contactor
1800/2200 AMP SCR Solid State Contactor

1 GPM at 104°F (40°C) maximum inlet temperature.

TUBE MANUFACTURER'S COOLING RECOMMENDATIONS

Table 5-2 shows typical cooling requirements at 500 VAC operation in GPM.
Maximum water temperature 50°C (122°F)

Table 5-2. *Cooling Requirements*

WATER INLET TEMPERATURE	IGNITRON TUBE SIZE			
	B	C	C½	D
15°C (59°F)	1/4	3/8	1	1-1/2
30°C (86°F)	1/2	1/2	1-1/2	2
40°C (104°F)	1	1-1/2	2	3

5.5 COOLING REQUIREMENTS FOR CONTACTORS (cont.)

Be sure power to an electronic Contactor is turned off when water is turned off.

With a voltage applied, most water will ionize and begin to conduct current between tubes or SCRs. This current is sufficient to heat the water past the boiling point, creating steam and possibly causing the rubber hose to burst. The water spraying over the high voltage circuit can cause considerable damage to the Contactor and, most likely, the control circuitry as well. Never use metallic or other conductive tubing to plumb a water-cooled resistance welding Contactor. Heater hose has a very high carbon content and should not be used for Contactor plumbing. A low carbon, reinforced hose (such as the hose originally supplied with the unit), no less than 18" long, must be used to connect the tubes or SCRs to each other and to the bulkhead fitting on the inside wall of the cabinet (see plumbing instructions on Wiring Diagram).

The 600 Ampere water-cooled Contactor in the EN2000 “S” and “E” Cabinets is electrically isolated from the electrical circuit within the Contactor. All water connections are made external to the control cabinet. No minimum length of water hose is required for electrical isolation of the Contactor. It is still recommended to turn power off when the control is not in use.

WATER OFF – POWER OFF
POWER ON – WATER ON

For all water-cooled Contactors, be sure water is turned ON before placing welder in operation. An open drain is recommended for best operation. If a closed return system is used, be sure return line is properly sized so that back pressure will not reduce water flow below recommendations. A sight flow indicator is recommended.

5.6 INSTALLATION DIAGRAMS – "S" CABINET

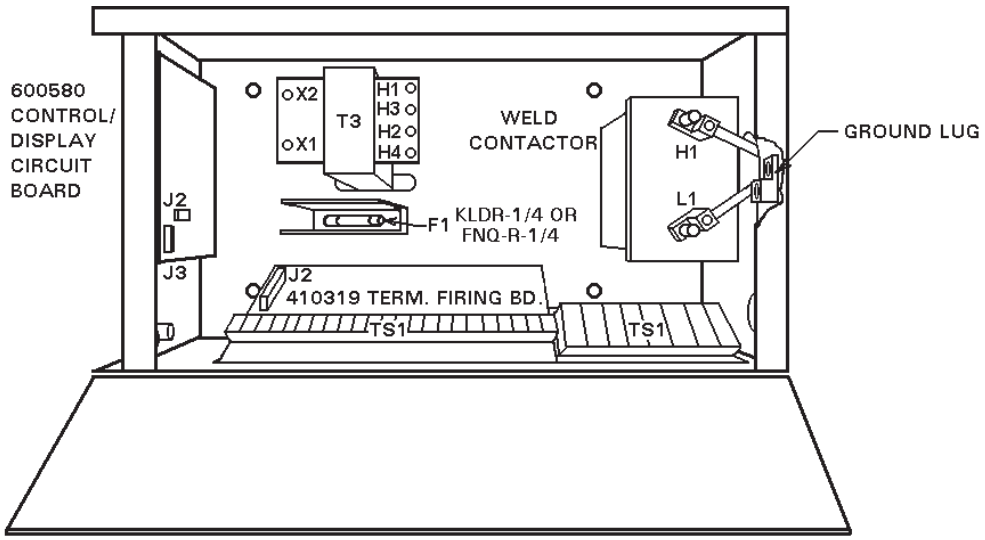

STYLE 'S' CABINET

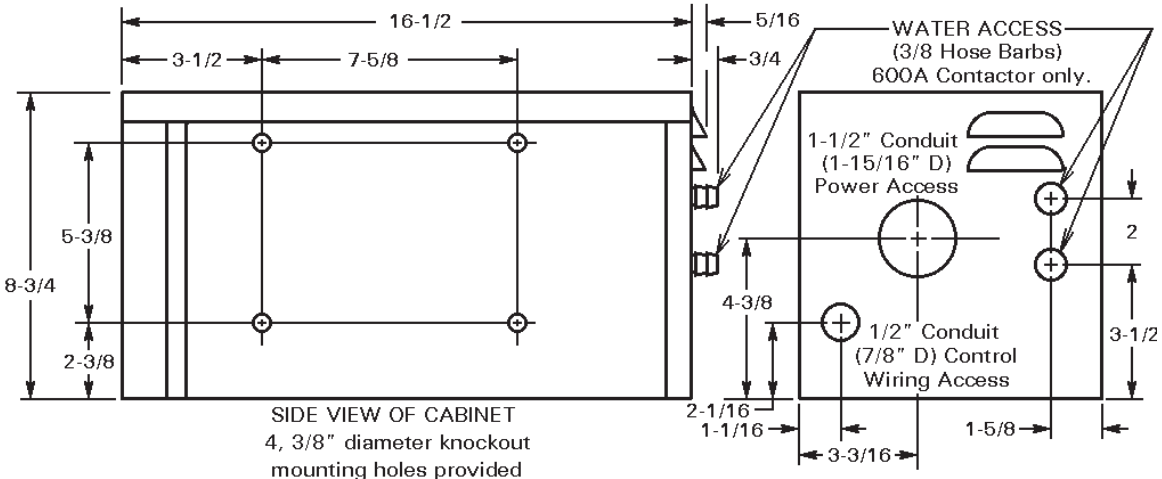

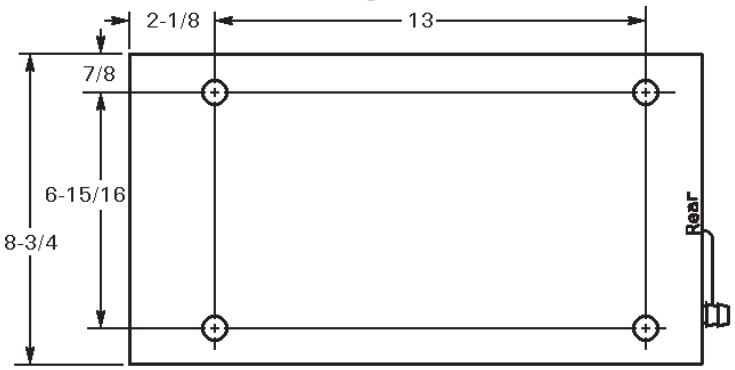

BOTTOM VIEW OF CABINET
4 mounting feet, 5/8"
diameter provided.

Figure 5-5. *Style "S" Cabinet*

5.7 INSTALLATION DIAGRAMS – "E" CABINET

See Figure 5-10 for mounting information.

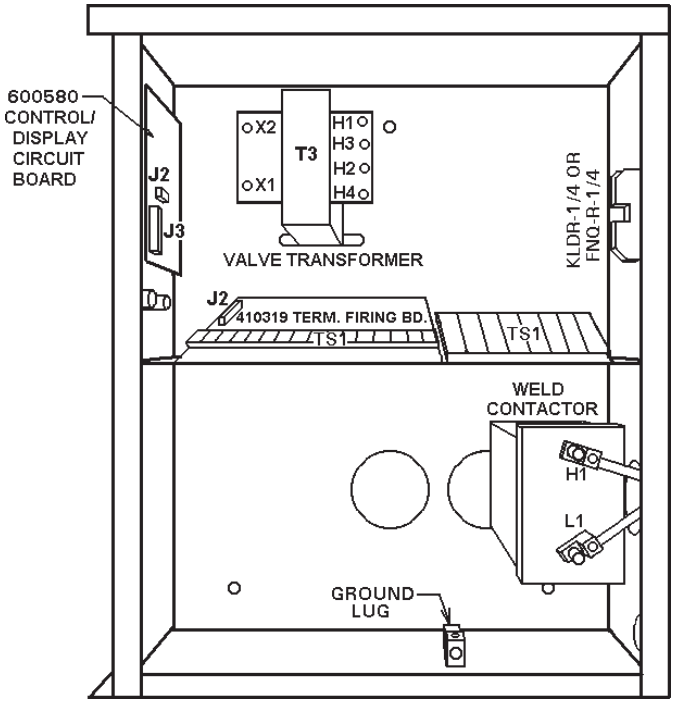

Figure 5-6. *Style "E" Cabinet – 300/600/1200A Contactor*

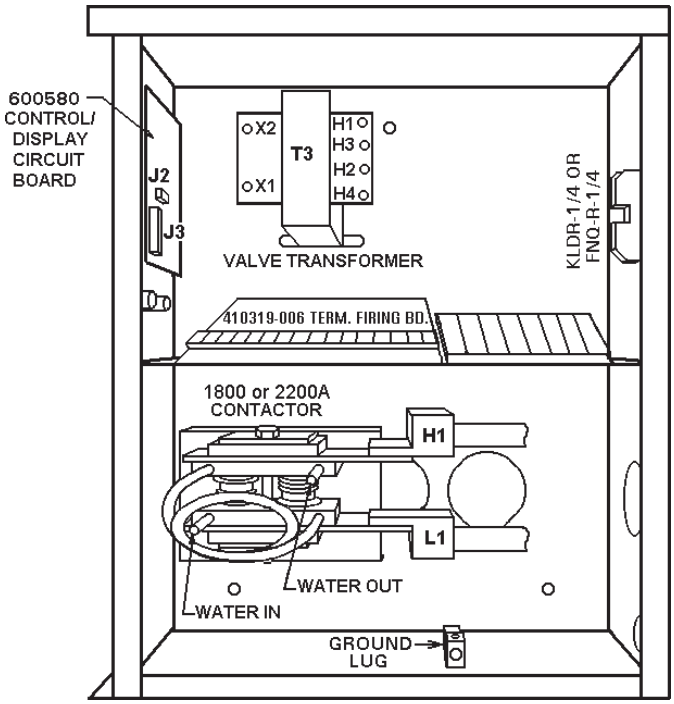

Figure 5-7. *Style "E" Cabinet – 1800/2200AContactor*

5.8 INSTALLATION DIAGRAMS – "T/D" AND "L" CABINETS

See Figure 5-11 for mounting information.

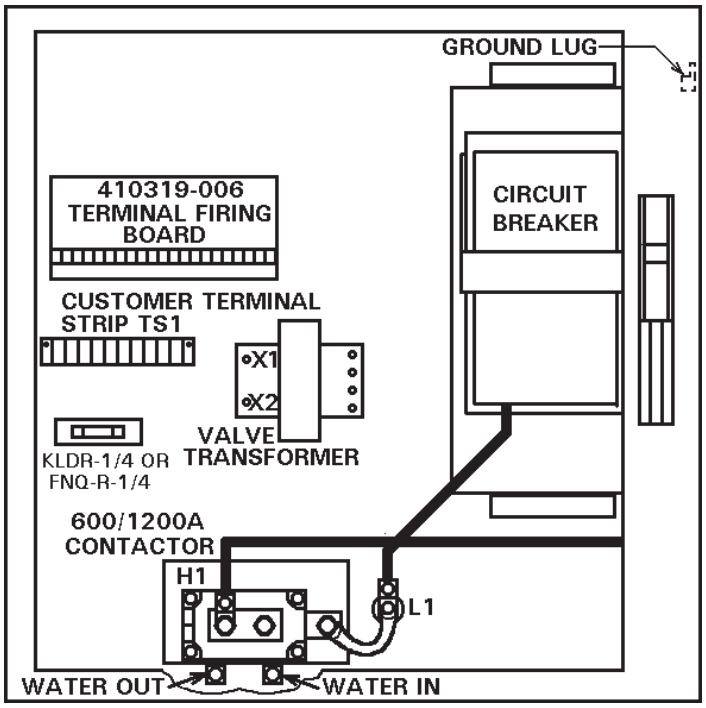

Figure 5-8. *Style "T/D" and "L" Cabinets – 600/1200A Contactor*

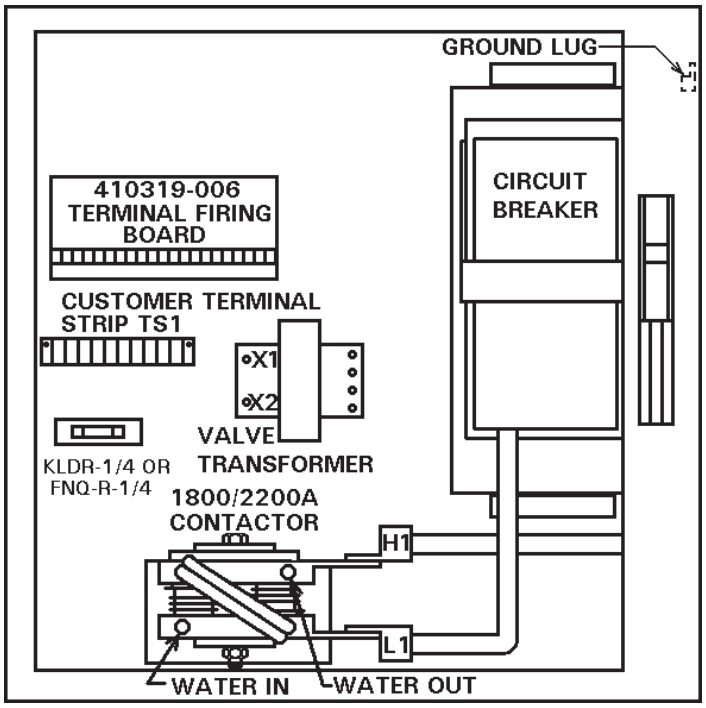

Figure 5-9. *Style "T/D" and "L" Cabinets – 1800/2200A Contactor*

5.9 MECHANICAL MOUNTING DIAGRAMS

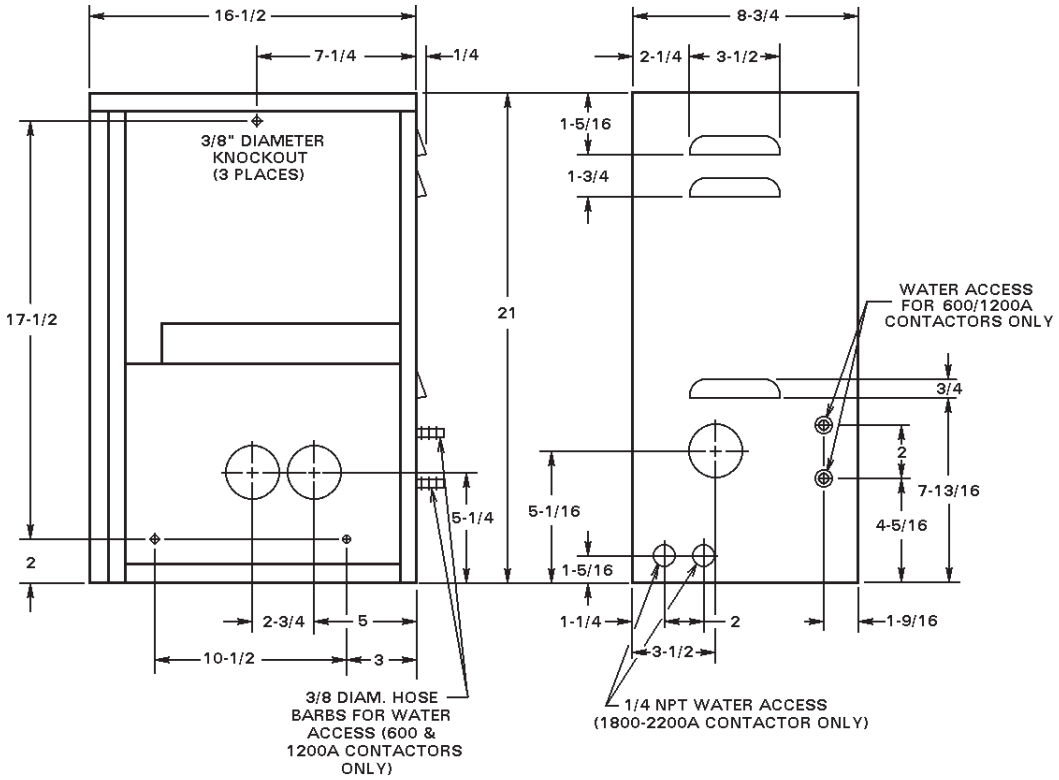

Figure 5-10. *Mechnical mounting diagram for "E" Cabinet*

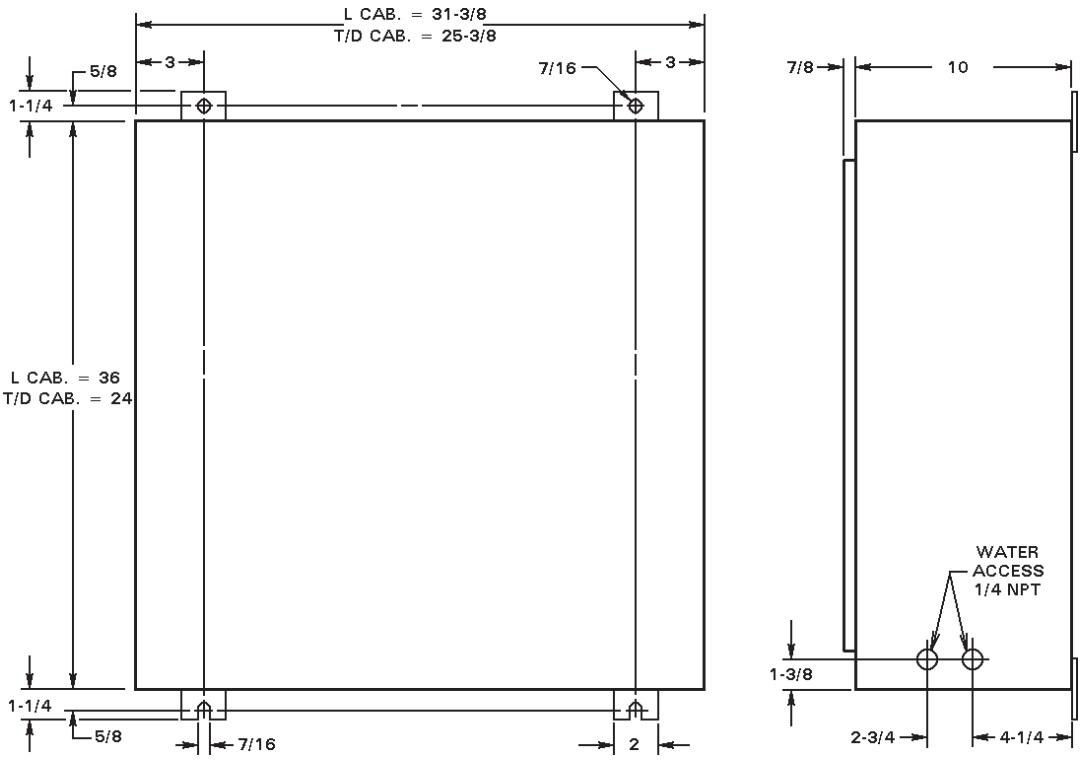

Figure 5-11. *Mechnical mounting diagram for "T/D" and "L" Cabinets*

6.0 GENERAL OPERATING INSTRUCTIONS

1. For your convenience, many electrical and mechanical connections have been performed at the factory. Refer to Wiring Diagram for other connections.
2. Be sure **ALL** electrical connections are properly made and that all fittings are securely tightened. Loose electrical connections can cause faulty or erratic operation of the control or welding machine.
3. If the machine is air operated, turn on the air supply to the machine. Set air pressure in accordance with the machine manufacturer's recommendations.
4. Turn on water. Be sure water is flowing freely in drain. On closed systems, check flow gauge for water flow.
5. Be sure that the welding machine head is fully retracted. Turn on main power. The function displays should come on at this time.
6. Put the control in NO WELD by using the WELD/NO WELD push button on control and/or External WELD/NO WELD Switch.

NOTICE
Before proceeding, refer to Section 7.0 for programming details.

7. Program a simple single SPOT schedule into the control as follows:

   SQUEEZE count ..... 30 to 60 cycles
   WELD count ..... 02 to 03 cycles
   PERCENT CURRENT ..... 50 to 60%
   HOLD count ..... 10 to 15 cycles
   OFF count ..... 00 cycles
   REPEAT/NON-REPEAT LED ..... NON-REPEAT
   SCHEDULE indicator LED ..... SCHEDULE 1
8. Set the welding transformer tap to LOW or a low tap switch setting.
9. Initiate the control. On installations with a Two Stage Pilot switch, depress the First Stage only. Welding head or arms will close. Control will not sequence. Be sure that the electrodes have closed together and then depress the Second Stage. The control will sequence but will not weld, and then the head or arms will retract. On Single Stage operation, closure of the Pilot switch will cause the control to sequence. On foot-operated machines only, a switch on the mechanical linkage of the machine will initiate the sequence.

! CAUTION !
KEEP HANDS, ARMS, OTHER PORTIONS OF THE BODY, CLOTHING AND TOOLS AWAY FROM THE MOVING PARTS OF THE MACHINE.

10. Program the schedule for the part to be welded as recommended by the machine manufacturer or to RWMA standards for the work to be performed. Place the work in the machine and set the control to WELD (both on the Control Panel and any External Weld/No Weld Switches). The machine is now ready to weld.
11. If no standards have been set, it is recommended to use a short WELD count for initial setup and welding. WELD count can be increased, welding transformer tap can be increased, and PERCENT CURRENT can then be adjusted for the best weld. The most efficient use of the control and welding machine will generally be made at the lowest welding transformer tap, the highest PERCENT CURRENT setting, and the shortest WELD count.
12. For REPEAT operation, REPEAT/NON-REPEAT indicator LED should point to REPEAT. Program OFF count to allow sufficient time to reposition part for subsequent welds.

7.0 INTRODUCTION TO PROGRAMMING

The EN2000 is capable of storing and accessing two completely unique welding schedules. Programming allows the operator to enter or change parameters of weld schedules and the subsequent storing of those parameters in non-volatile memory. Basically, programming only requires selecting the function to be programmed (or modified) and then entering the desired parameters (data).

7.1 GENERAL PROGRAMMING

1. Select the schedule that you wish to enter or modify by pressing SCHEDULE SELECT push button until the display goes blank. The current SCHEDULE indicator LED will blink and, upon release of the switch, the other SCHEDULE indicator LED will point to the next schedule.
2. Press PROGRAM SELECT push button and release. The SQUEEZE display will maintain brightness. All other function displays will dim. The control will now accept new data or existing data can be modified.
3. Use ONES & TENS push buttons to select the desired value for function with **brightest** display (as explained in Section 3.0). The TENS push button increments the tens digit by one and the ONES push button increments the ones digit by one. When either digit reaches the maximum, it resets to zero.
4. Select the next function to be entered or modified by pressing the PROGRAM SELECT push button until the desired function is reached. The brightest function display indicates which function may be entered or modified. When PROGRAM SELECT push button is pressed again, the next function display will brighten.

NOTICE
If PROGRAM SELECT is pressed once when the OFF function is brightest, all function displays will be the same intensity.

7.2 CLEAR ALL

It is sometimes desirable to clear all previous schedules from the memory and return the programmed control parameters to factory defaults.

To execute the CLEAR ALL function, hold the PROGRAM SELECT push button upon power-up and the control will erase all programmed parameters in both schedules.

NOTICE
WHEN THE CLEAR ALL FUNCTION IS EXECUTED, THE PREVIOUS SCHEDULES CANNOT BE RESTORED.

7.3 EXTENDED FUNCTIONS

The EN2000 Series Controls extend their versatility and cost effectiveness through use of EXTENDED FUNCTIONS. The EXTENDED FUNCTIONS are intended to give more versatility to the advanced applications without encumbering casual applications. Most of the default settings (factory shipped mode) of the EXTENDED FUNCTIONS are set for the more common uses and may need to be changed before they are used.

To enter or change the EXTENDED FUNCTIONS provided, the function must be selected by closing a switch in the back of the Display Board (see Figure 7-1).

The available EXTENDED FUNCTIONS are listed below and described in the indicated sections.

Designation	Description	Section
AVC	Automatic Voltage Compensation	7.3.1
87°	87° Delay	7.3.2
APF	Automatic Power Factor	7.3.3
50Hz/60Hz	50Hz/60Hz Operation	7.3.4

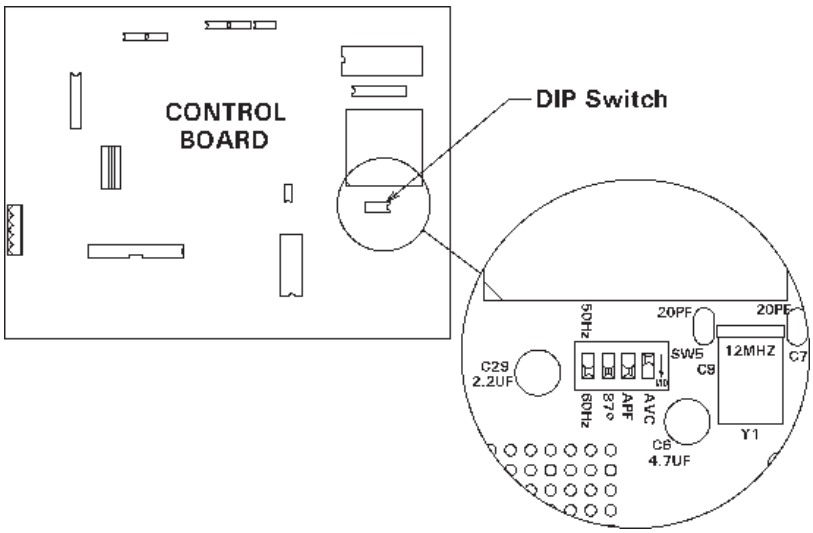

Figure 7-1. *EXTENDED FUNCTIONS DIP Switch*

7.3.1 AUTOMATIC VOLTAGE COMPENSATION

The EN2000 Controls are shipped with the AUTOMATIC VOLTAGE COMPENSATION feature disabled. Under conditions of poor line voltage regulation, its use will provide consistently good quality welds in spite of varying line voltage. To enable AVC, slide the AVC switch to the ON position (see Figure 7-1). Once the switch is in the SELECT or ON position, press and hold the PROGRAM SELECT push button until the display goes blank. This process records the nominal line voltage in the control's non-volatile memory.

NOTICE
The AUTOMATIC VOLTAGE COMPENSATION feature must be enabled at a time when the line voltage is nominal, not abnormally high or low.

NOTICE
When using AVC, select a PERCENT CURRENT not higher than 85% to allow the AVC circuit operating space.

7.3.2 87° DELAY

The purpose of the 87° DELAY is to prevent the build-up of a DC component in the welding transformer which may be damaging to wound core (hypersil) transformers and some stacked core transformers. If this delay is not needed, it may be disabled (or re-enabled) by sliding the corresponding DIP Switch in the back of the Front Panel Display Board to the desired position (see Figure 7-1).

ON = 87° DELAY enabled
OFF = 87° DELAY disabled

7.3.3 AUTOMATIC POWER FACTOR

The EN2000 incorporates AUTOMATIC POWER FACTOR equalization in its programming. Calibration of the AUTOMATIC POWER FACTOR circuit is not required. This feature makes it unnecessary to make manual adjustments when installing the control, to match its circuitry to the power factor of welding machine. It assures that maximum welding current, for any welding transformer tap switch setting, will occur when selected PERCENT CURRENT is 99%. When shipped from the factory, EN2000 Controls are in AUTOMATIC POWER FACTOR mode.

If desired, for some applications, the AUTOMATIC mode can be disabled and a FIXED POWER FACTOR of 40 can be manually set into the control by moving the APF switch to the OFF position (see Figure 7-1).

7.3.4 50HZ/60HZ OPERATION

The EN2000 Controls will operate on either 50 Hz or 60 Hz AC power systems. As shipped from the factory, they are set for 60 Hz operation. If operation at 50 Hz is required, move the appropriate DIP Switch to the 50 Hz position (see Figure 7-1).

8.0 OPERATING SEQUENCES

The EN2000 Control can operate in either NON-REPEAT or REPEAT mode.

8.1 NON-REPEAT MODE

When a schedule is initiated by a Pilot switch connected to TS1-FS3, the sequence is as follows: Initiation – Squeeze – Weld – Hold – Off (see Figure 8-1).

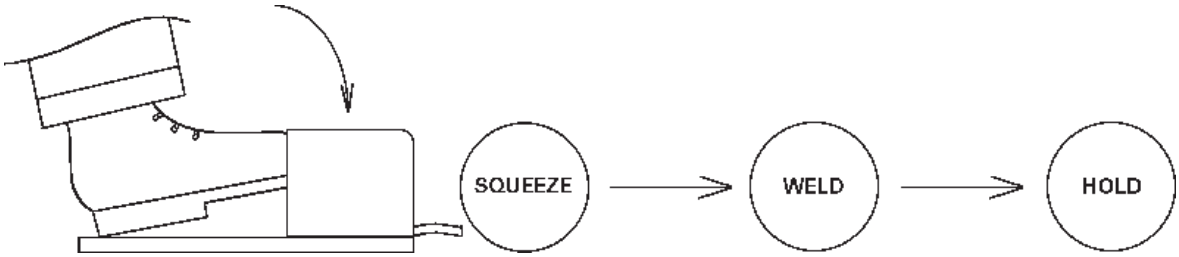

Figure 8-1. *NON-REPEAT sequence*

Upon initiation, the valve is energized at the beginning of SQUEEZE.

If the Pressure Switch is open, the control counts SQUEEZE but does not begin counting WELD time. The control remains stopped at that point in the sequence until the Pressure Switch closes, then WELD time begins and the schedule will continue to completion. If the Pressure Switch remains open, the SQUEEZE function display will flash.

Weld current is then supplied to the welding transformer at a value programmed by the PERCENT CURRENT for the WELD period.

During HOLD, welding current is not present, but the valve will still be energized. When OFF begins, the solenoid valve is de-energized.

8.2 REPEAT MODE

If the control is initiated and the initiation remains closed, the sequence will be as shown in Figure 8-2.

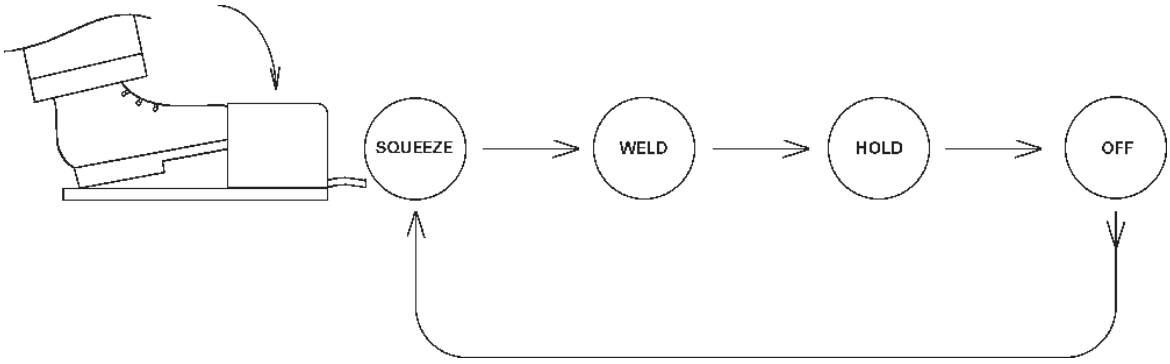

Figure 8-2. *REPEAT sequence*

8.2 REPEAT MODE (cont.)

The operations achieved in each schedule are the same as in NON-REPEAT.

When the initiation is released, the sequence ends as in NON-REPEAT. If it is released during SQUEEZE, WELD, or HOLD, the sequence continues through HOLD and stops.

8.3 MULTIPLE SCHEDULE OPERATION

2C/2C (DUAL COUNT/DUAL CURRENT) can be accomplished on the EN2000. A switch closure between TS1-FS3 and TS1-GND then will initiate schedule 1. A switch closure between TS1-FS7 and TS1-GND will initiate schedule 2.

9.0 ERROR CODES

Please refer to other manual pages and Wiring Diagrams for location of fuses, Terminal Strips, etc. Please refer to Wiring & Logic Diagrams for Bills of Material.

ERROR	POSSIBLE CAUSE	REMEDY
Data/Schedule Display E.r.=01	Error Code #01 Temperature Limit Switch open or overheated.	Wait for the Temperature Limit Switch to cool or check for open circuit. **See Section 4.2 and 5.3**.
Data/Schedule Display E.r.=02	Error Code #02 FS1 AND FS7 both closed.	Two Stage Operation not allowed with FS7. **See Section 4.0 and 5.3.**
Data/Schedule Display E.r.=04	Error Code #04 Attempt to weld in PROGRAM mode.	Return to OPERATE mode. **See Section 2.1 and 7.1.**
Data/Schedule Display E.r.=05	Error Code #05 FS1,FS3,FS7 closed to GND before power on or before Emergency Stop is re-closed after being opened.	Initiations must be open at power on or after an Emergency Stop. **See Section 1.1, 4.2, and 5.3**.
Data/Schedule Display E.r.=07	Error Code #07 FS1 initiated while another seq. active.	Open TS1-FS1. **See Section 4.0, 4.1, 5.3, and 8.3.**
Data/Schedule Display E.r.=08	Error Code #08 FS3 initiated while another seq. active.	Open TS1-FS3. **See Section 4.0, 4.1, 5.3, and 8.3**.
Data/Schedule Display E.r.=09	Error Code #09 FS7 initiated while another seq. active.	Open TS1-FS7. **See Section 4.0, 4.1, 5.3, and 8.3.**
Data/Schedule Display E.r.=11	Error Code #11 Control Board. Control Relay problem.	Replace Control Board.
Data/Schedule Display E.r.=12	Error Code #12 Control Board. Hardware error.	Replace Control Board.
Data/Schedule Display E.r.=13	Error Code #13 Full conduction detected. Manual Power Factor only.	Change to higher welding transformer tap. **See Section 7.3.3.**

9.0 ERROR CODES (cont.)

ERROR	POSSIBLE CAUSE	REMEDY
Data/Schedule Display E.r.=14 (Flashing)	Error Code #14 Flashing EEPROM error. Possible electrical disturbance causing invalid data storage.	Clear all SCHEDULES and EXTENDED FUNCTIONS. **See Section 4.3 and 7.2.**
Data/Schedule Display E.r.=14 (NON-Flashing)	Error Code #14 NON-Flashing EERAM memory failure.	Replace Control Board. **See Section 4.3 and 7.2.**
Data/Schedule Display E.r.=15	Error Code #15 Pressure Switch open too long.	1. Close Pressure Switch 2. Check wiring for open. **See Section 1.1 and 4.2**.
Data/Schedule Display E.r.=17 or E.r.=18	Error Code #17 or 18 Nominal AVC reading too low or too high.	1. Reprogram nominal setting. 2. Not enabled when line was nominal. **See Section 7.3.1.**
Data/Schedule Display E.r.=19 or E.r.=20	Error Code #19 or 20 AVC reading too low or too high.	AVC could not compensate. Change tap or PERCENT CURRENT. **See Section 7.3.1.**
Data/Schedule Display E.r.=22	Error Code #22 +18 VDC out of range. Line voltage high.	1. Line voltage too high. 2. Control transformer jumpered incorrectly. **See Section 5.0.**
Data/Schedule Display E.r.=23 or E.r.=24	Error Code #23 or 24 Manual Power Factor error.	1. Full conduction reached. 2. Set Automatic Power Factor. **See Section 7.3.3.**
Data/Schedule Display E.r.=26	Error Code #26 Contactor short detected.	1. Check Contactor for short. 2. Check Firing Module 410318.

10.0 TROUBLESHOOTING

Please refer to other manual pages and Wiring Diagrams for location of fuses, Terminal Strips, etc. Please refer to Wiring & Logic Diagrams for Bills of Material.

TROUBLE	POSSIBLE CAUSE	REMEDY
Front Panel will not illuminate.	1. Fuse F1, type 1/4 Amp, control fuse blown. 2. Defective Control Board. 3. Main welder disconnect open. 4. L2 wire to Terminal Strip missing.	1. Check that control is wired for proper input line voltage (H1, H2, H3 and H4 and CTH1, CTH2, CTH3 and CTH4 jumpers on Terminal Strip). 2. Replace Control Board. 3. Check that fuse or circuit breaker is of sufficient size for KVA demand of welding transformer. 4. Add L2 wire (minimum 18 AWG).
Control will not initiate.	1. Initiation switch(es) defective. 2. Loose or broken wire(s) at initiation switch(es). 3. Fuses F6 valve fuse blown. 4. Defective Control/Display or Terminal Strip/Firing PCB.	1. Replace switch(es). 2. Check for loose or broken wire(s) at initiation switch(es) and at Terminal Strip (FS1, FS3, etc.). 3a) Check solenoid coil for short. 3b) Check for proper solenoid coil voltage. 4. Replace board with another board stamped with same A/N.
Control initiates, valve light comes on, but electrodes ***do not*** close.	1. Solenoid valve circuit mis-wired or broken wires. 2. No air or blocked air line.	1. Check terminals VL1, SV1 and SV2, and associated wiring (see Wiring Diagram). 2a) Be sure air is on. 2b) Repair or replace air accessories.
Control does not initiate, but welder head or arms close.	1. Mis-wired for Single Stage operation. 2. Second Stage Pilot switch open. 3. Defective Control/Display or Terminal Strip/Firing PCB.	1. Check Pilot switch between FS3 and GND. 2. Check for proper operation of Pilot switch. Be sure First Stage closes before Second Stage. 3. Replace board with another board stamped with same A/N.

10.0 TROUBLESHOOTING (cont.)

TROUBLE	POSSIBLE CAUSE	REMEDY
Control initiates, but stays in SQUEEZE.	1. Pressure Switch. 2. Defective Control/Display or Terminal Strip/Firing PCB.	1a) Check for defective or malfunctioning Pressure Switch connected to PS1 and GND. 1b) If no Pressure Switch is used, jumper PS1 and GND. 2. Replace board with another board stamped with same A/N.
Control initiates and sequences properly, but solenoid valve chatters.	1. Solenoid valve coil. 2. Defective Control/Display PCB. 3. Defective Terminal Strip/Firing Board. 4. L2 wire to Terminal Strip missing.	1a) Check that valve supply voltage is not varying below tolerance, -15%. 1b) Check if valve coil is proper voltage. 1c) Insufficient air pressure. 1d) Loose connections in valve wiring. 2. Replace board with another board stamped with same A/N. 3. Replace board. See Wiring Diagram for correct A/N. 4. Add L2 wire (minimum 18 AWG).
Control sequences but will not weld.	1. External Weld/No Weld Switch or WELD/NO WELD push button on Front Panel of control. 2. Open Temperature Limit Switch. 3. Ignitor leads reversed on control used with existing ignitron tube contactor. 4. Welding transformer tap switch in OFF position. 5. Welding transformer secondary open (WELD light may light). 6. Defective Terminal Strip/Firing PCB. 7. Defective Control/Display PCB.	1a) Check both for proper operation and/or loose wires on NW1 & GND. 1b) If no external Weld/No Weld Switch is used, put jumper across NW1 and GND. 2a) Contactor overheated, causing Limit Switch to open. 2b) Defective Limit Switch. Replace. 2c) Connect jumper across TLS1 and GND if TLS is not used. 3. Interchange leads. 4. Set to ON or at one of the tap positions. 5. Check corroded or open connections. Be sure welding electrodes close on work. 6. Replace board. See Wiring Diagram for correct A/N. 7. Replace board with another board stamped with same A/N.
WELD light on continuously with control in NO WELD.	1. Shorted ignitron tube or thyristor (SCR). 2. Ignitor circuit of ignitron tube shorted to ground. 3. Defective Ignitron Firing Module.	1. Check that mercury in ignitron tube has not splashed up (tap tube lightly). **CAUTION: Turn power off.** 2. Replace defective tube or SCR. 3a) Check ignitor leads. 3b) Replace board. See Wiring Diagram for correct A/N.

10.0 TROUBLESHOOTING (cont.)

TROUBLE	POSSIBLE CAUSE	REMEDY
HALF CYCLE during WELD time. **NOTE:** Ignitor fuses and resistors are located on the Ignitron/Firing Module.	1. One ignitor circuit open. 2. One ignitron tube or thyristor does not conduct. 3. Defective Terminal Strip/Firing or Ignitron Firing Module PCB.	1a) Check connections to ignitor resistor. 1b) Check ignitor lead connection to tubes. 1c) Check for open ignitor fuse (F4 and F5, BAF6). 2. Check tube or thyristor for open. Replace. 3. Replace board. See Wiring Diagram for correct A/N.
Weld too cool or too small.	1. Line voltage drop. 2. Excessive pressure at electrodes. 3. Weld transformer set low. 4. WELD count too short. 5. PERCENT CURRENT too low. 6. Electrode face too small. 7. Excessive tip “mushrooming”.	1. KVA demand for welding transformer too high for input power line. 2. Check air supply. 3. Increase transformer tap setting. 4. Increase WELD count duration. 5. Increase PERCENT CURRENT. 6. Select correct electrode face diameter. 7. Properly dress tips.
“HOT” Welds	1. Insufficient air pressure. 2. Weld transformer set high. 3. WELD count set too high. 4. PERCENT CURRENT set too high. 5. Electrode diameter too small.	1. Check air supply and accessories. 2. Reset tap to lower setting. 3. Reduce WELD count duration. 4. Decrease PERCENT CURRENT. 5. Dress or replace tip with proper size.
Inconsistent Welds	1. Varying air pressure. 2. Work not square with electrodes. 3. Poor part fit-up. 4. Dirty material to be welded.	1. Check air supply and accessories. 2. Check welding fixtures setup or electrode alignment. 3. Check parts for proper fit-up. 4. Work should be free from excessive dirt, paint and oxides.

11.0 ENTRON LIMITED WARRANTY AND FACTORY SERVICE

ENTRON Controls, LLC., warrants that all ENTRON control panels, **EXCEPT** Mid-frequency Inverter controls, silicon controlled rectifiers (SCRs), insulated gate bipolar transistors (IGBTs), SCR and IGBT assemblies, circuit breakers, and electro-mechanical contactors, are free of manufacturing defects for a period of **TWO YEARS** from the date of original purchase and, in the event of a manufacturing defect, ENTRON will repair or replace, at its discretion, the defective part without any cost for parts or labor.

All silicon controlled rectifiers, SCR and IGBT assemblies, circuit breakers, and electro-mechanical contactors in ENTRON control panels are covered by **a limited warranty from the original manufacturer**. If these parts fail because of a manufacturing defect, they will not be repaired or replaced by ENTRON, but will be returned by ENTRON to the original manufacturer in accordance with said manufacturer's warranty.

ENTRON Controls, LLC., warrants that all Mid-frequency Inverter controls are free of manufacturing defects for a period of **ONE YEAR** from the date of original purchase and, in the event of a manufacturing defect, ENTRON will repair or replace, at its discretion, the defective part without any cost for parts or labor.

To obtain repairs or replacement parts under this warranty, the defective part must be returned, prepaid, to ENTRON Controls, LLC., 1402 S. Batesville Road, Greer, SC 29650. Please send your repair to the attention of "Service" with a description of the problem you are experiencing, contact person, and phone number.

EXCLUSIONS: This warranty does not cover damage by accident or misuse, unauthorized repair or modification to any control assembly by the customer.

IMPORTANT NOTE: The warranty period is considered from the date of shipment and is tracked by a serial number code.

USE OF OUT OF WARRANTY REPAIR SERVICE:
To obtain service for any printed circuit board assembly or control after the warranty period, send the assembly or control, prepaid, to ENTRON Controls, LLC., and ENTRON will repair the printed circuit board assembly or control and return it to you without further warranty. Additional service charges may be invoiced at time of shipment.

Your ENTRON Controls, LLC., Original Equipment Manufacturers (OEMs), Dealers and Distributors are your first response contact to secure technical assistance on control or welding problems. Should they be unable to assist you, please contact your ENTRON sales representative or the factory directly. Contact the factory at 864-416-0190.

APPENDIX A

ISOLATION CIRCUITRY DESCRIPTION

The EN2000 Series Controls are microprocessor-based resistance welding controls that incorporate circuitry designed to prevent any output from the control due to spurious conditions or failure of circuit components. The intent of this Appendix is to explain how the circuitry accomplishes this isolation.

The main isolation is provided by electro-mechanical control relay contacts that are in series with the solenoid valve voltage supply and the contactor firing circuitry. In a non-initiated state, the relay contacts are open and no outputs from these circuits are possible. When the control is initiated by the physical closure of a normally open set of external contacts (commonly a foot switch) across the initiation circuit, the relays are energized and their contacts close and complete the circuits to the solenoid valve and the contactor. The outputs are not actually energized, however, until the microprocessor reaches the point in the sequence at which the valve or contactor outputs are to be activated.

There is no way to guarantee that any control circuit will be free of any component failure. It is always necessary to take personal safety precautions when operating any machinery.

In addition to the relay contacts mentioned above, there are other levels of isolation. The initiation signals first pass through a circuit comprised of opto-isolators before being passed to the input circuitry of the microprocessor. The valve outputs are further isolated by the use of optically coupled triac (solid state) outputs and the weld pulses are isolated by a pulse transformer.

NOTICE
Valve 3 (SV5/SV6) will not be isolated if jumper “B” is used on TS3 – see Figure A1.

APPENDIX A (cont.)

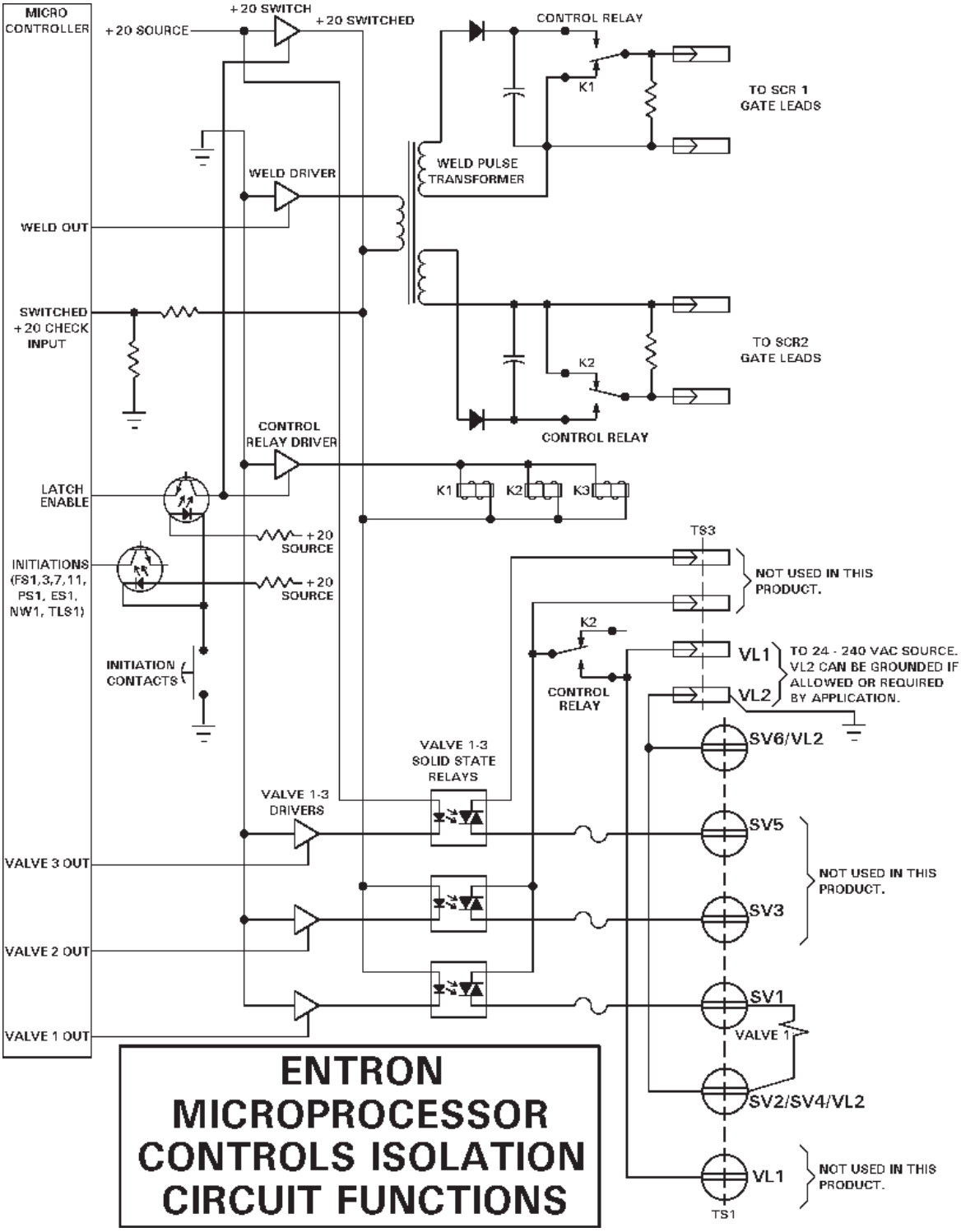

Figure A1. *Isolation Circuitry diagram*